BMS7702
Vista™ Storage Shed
ASSEMBLY INSTRUCTIONS

Tools Needed for Installation

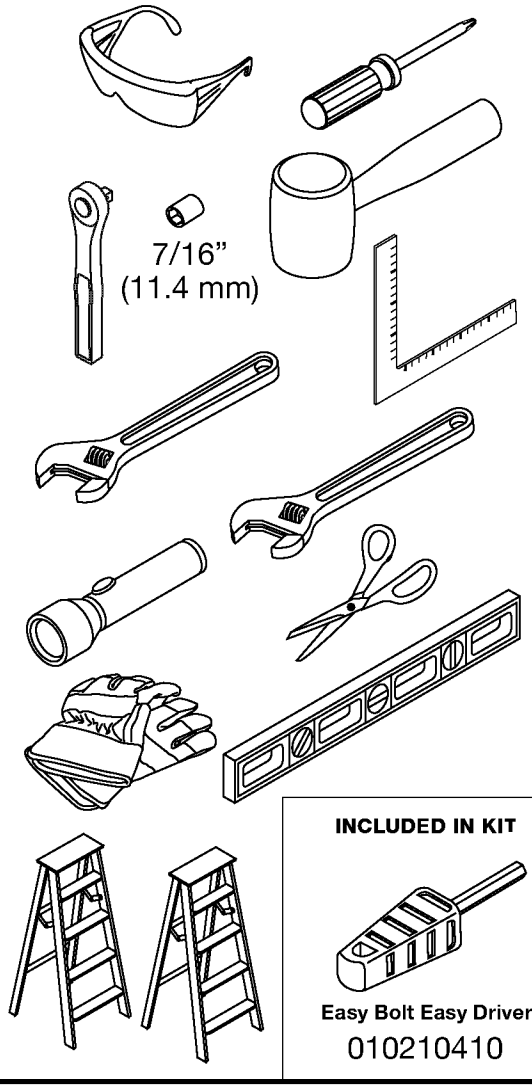

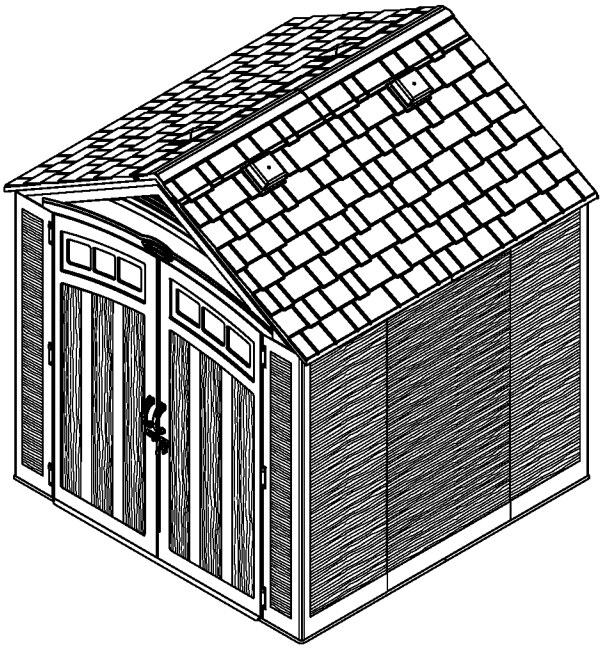

KEEP THESE INSTRUCTIONS. You will need Quality Control Number shown below to register your product.

Quality Control Number:

© 2018 Suncast Corporation, Batavia, IL

0361449C

Before You Begin...

- **Consult your local authorities for any permits required to construct shed.**
  Prior to the construction of your shed, check with the local building code official to review any required permits or building limitations.
- **A level and sturdy foundation is required before shed construction can begin.**
  Site preparation information is available on pages 11-12. A foundation that differs from the suggestions within this manual could prevent proper assembly and may damage parts.
- **Read instructions thoroughly prior to assembly.**
  This kit contains parts that can be damaged if assembled incorrectly or in the wrong sequence.
- **Please follow instructions.**
  Suncast is not responsible for replacing parts lost or damaged due to incorrect assembly.
- **Assistance is required during entire assembly.**

IMPORTANT

OPEN ALL BOXES FIRST AND NEATLY LAYOUT PARTS. SMALL PARTS MAY BE CONTAINED IN EACH BOX. PLEASE REFERENCE PARTS LIST WITHIN THIS MANUAL TO VERIFY ALL PARTS ARE PRESENT.

COMPLETE SITE PREPARATION AND FOUNDATION CONSTRUCTION BEFORE UNPACKING ALL PARTS.

CAUTION

- Proper site preparation required.
- Shed not intended for use in extreme weather conditions.
- Shed not intended for storage of flammable or caustic chemicals.
- Store heavy items near the bottom of shed.
- Shed not intended for use by children.
- **DO NOT** stand, sit, or store items on storage shed roof.
- Treat carefully in extreme temperatures.
- Repair or replace broken parts immediately.
- Suncast is not responsible for damage caused by weather or misuse.
- At regular intervals, inspect your shed to make sure that assembly integrity has been maintained.
- Periodically check that the location you have chosen to set your shed is still level.
- This kit contains parts with metal edges. Please be careful when handling.

Suncast Products and Replacement Parts

To purchase Suncast replacement parts and learn about other Suncast products, visit us online or call.

www.suncast.com
24 hours a day, 7 days a week, 365 days a year.

1-800-846-2345 or 1-630-879-2050.

Shed Safety and Care

- Hot items, such as recently used grills, blowtorches, etc., must not be stored in the shed.
- Heavy articles should not be leaned against the walls, as this may cause panel distortion and permanent damage.
- Keep roof clean of snow and leaves.
- The shed walls and roof sections have a textured exterior, much like vinyl home siding. Over time, dust may accumulate in the texture. When combined with moisture, this could encourage the growth of moss or mold on the shed. To maintain the look of your shed, we recommend cleaning it each year with mild soap and water. **DO NOT** use bleach, ammonia, or other caustic cleaners, and **DO NOT** use stiff bristle brushes. Failure to perform annual cleaning could result in permanent staining of the plastic. This is not a manufacturing defect and is not covered under warranty.

Assembly Day Tips

- Complete site preparation and foundation construction before unpacking parts and beginning assembly.
- **DO NOT** attempt to assemble on a day with strong winds.
- **DO NOT** attempt to assemble on days when temperature is below 32 degrees Fahrenheit.
- Set aside appropriate amount of time to completely assemble shed.
- Make sure you have assistance nearby to lift and secure parts in place.
- Wear light duty work gloves while assembling shed.
- Once roof is assembled, a flashlight may be of use when assembling smaller components inside shed.
- **DO NOT** use a torque wrench or hand drill to tighten provided Easy bolts. Use 010210410 Easy Bolt Easy Driver tool (provided) **ONLY**.
- Suncast provides extra hardware for small fasteners for customer convenience. In some cases, there will be extra small fasteners once the assembly is complete.

Note: *This product contains parts that are used in different orientations to construct the shed. Please take note of the orientation of the parts shown throughout this instruction manual. Failure to follow instructions could result in damage to parts. Suncast is not responsible for replacing parts lost or damaged due to incorrect assembly.*

Parts - BMS7702 Walls and Floors

IMPORTANT

OPEN ALL BOXES FIRST AND NEATLY LAYOUT PARTS. SMALL PARTS MAY BE CONTAINED IN EACH BOX. PLEASE REFERENCE THE PARTS LIST WITHIN THIS MANUAL TO VERIFY ALL PARTS ARE PRESENT.

COMPLETE SITE PREPARATION AND FOUNDATION CONSTRUCTION BEFORE UNPACKING ALL PARTS.

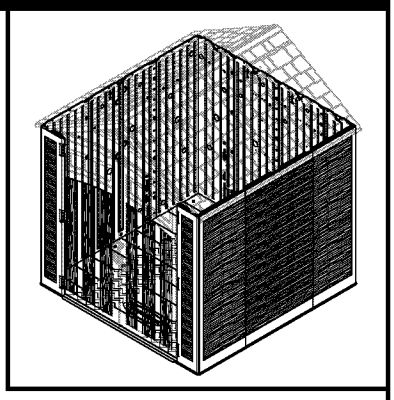

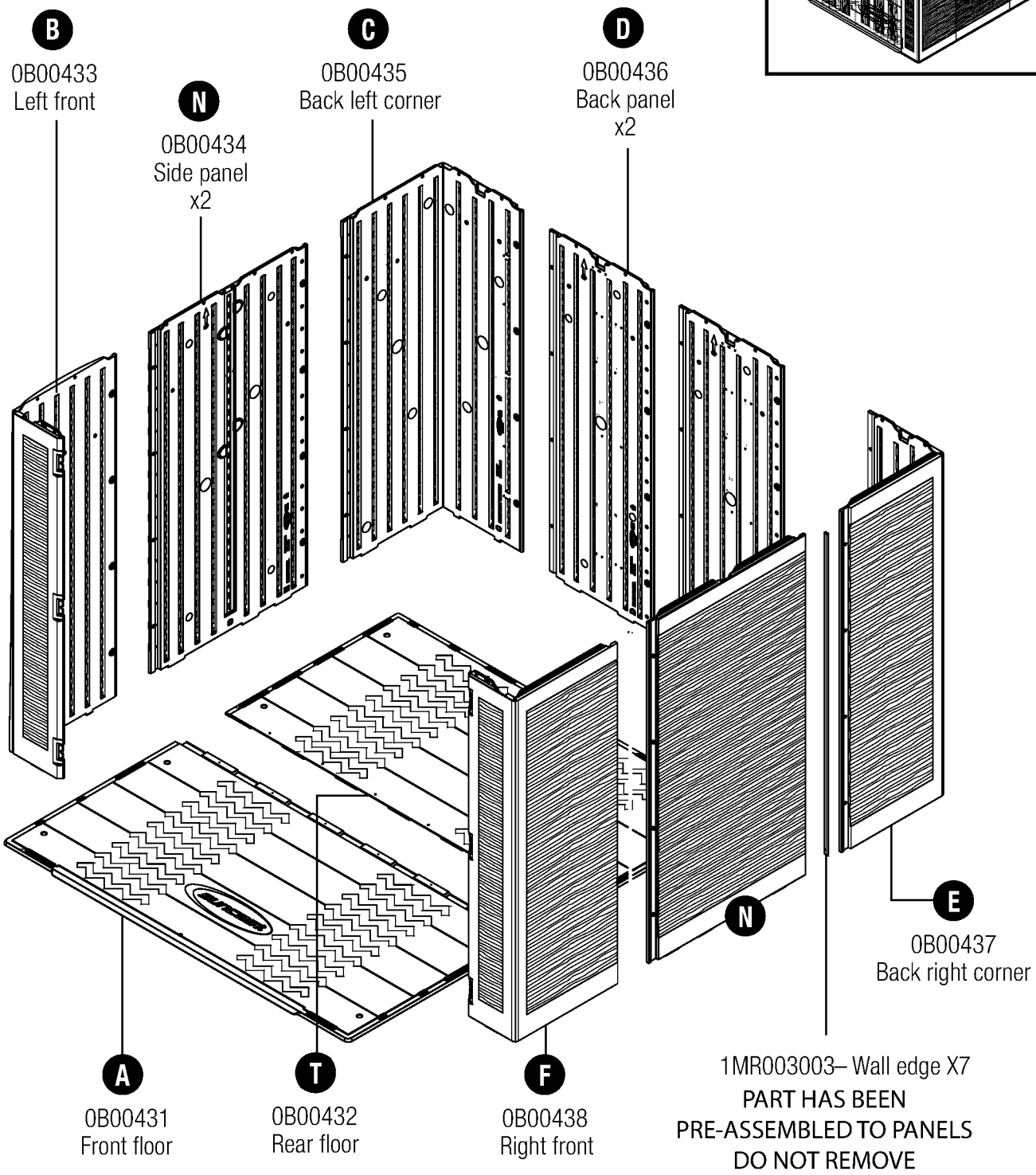

Parts - BMS7702 Doors

IMPORTANT

OPEN ALL BOXES FIRST AND NEATLY LAYOUT PARTS. SMALL PARTS MAY BE CONTAINED IN EACH BOX. PLEASE REFERENCE THE PARTS LIST WITHIN THIS MANUAL TO VERIFY ALL PARTS ARE PRESENT.

COMPLETE SITE PREPARATION AND FOUNDATION CONSTRUCTION BEFORE UNPACKING ALL PARTS.

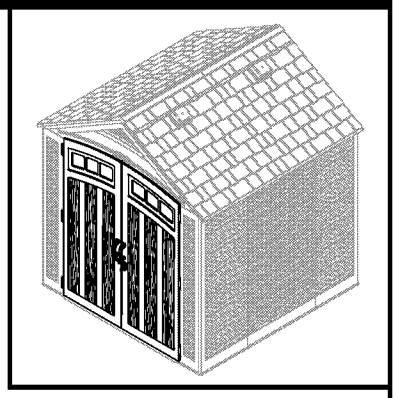

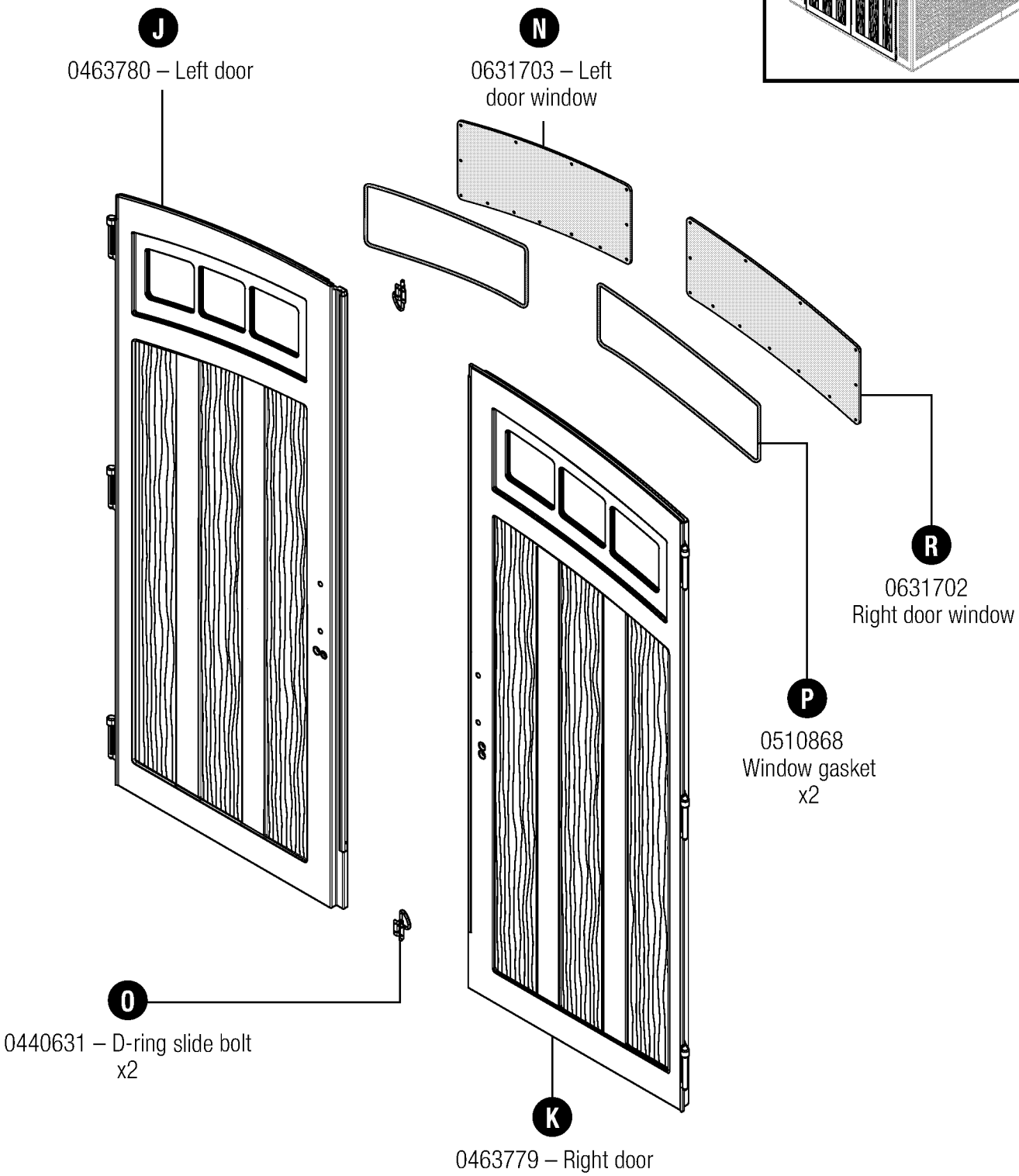

Parts - BMS7702 Headers

IMPORTANT

OPEN ALL BOXES FIRST AND NEATLY LAYOUT PARTS. SMALL PARTS MAY BE CONTAINED IN EACH BOX. PLEASE REFERENCE THE PARTS LIST WITHIN THIS MANUAL TO VERIFY ALL PARTS ARE PRESENT.

COMPLETE SITE PREPARATION AND FOUNDATION CONSTRUCTION BEFORE UNPACKING ALL PARTS.

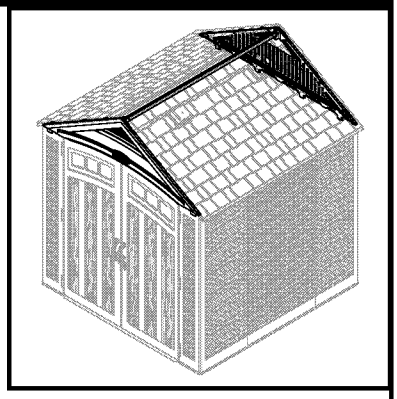

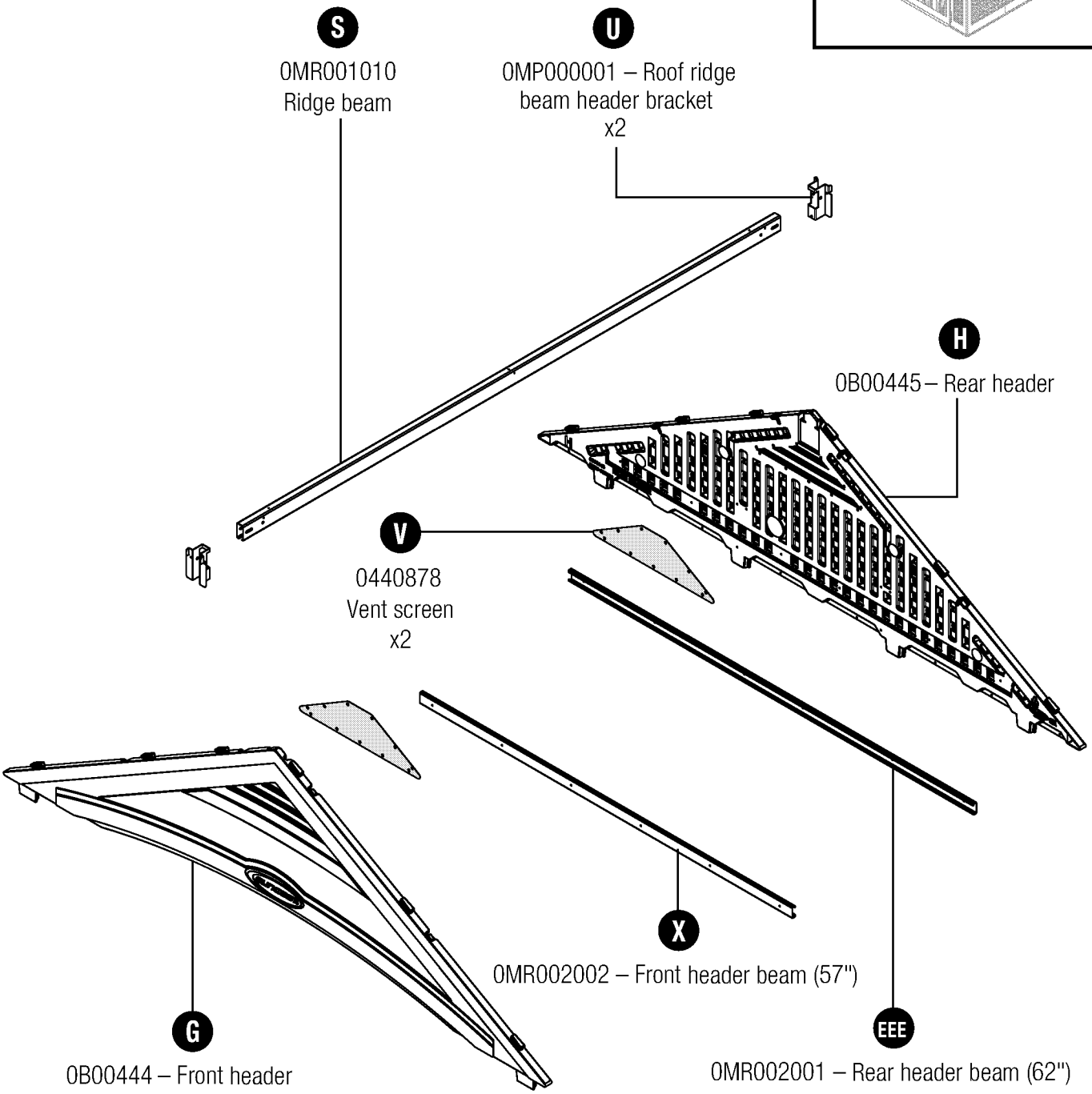

Parts - BMS7702 Roof Truss

IMPORTANT

OPEN ALL BOXES FIRST AND NEATLY LAYOUT PARTS. SMALL PARTS MAY BE CONTAINED IN EACH BOX. PLEASE REFERENCE THE PARTS LIST WITHIN THIS MANUAL TO VERIFY ALL PARTS ARE PRESENT.

COMPLETE SITE PREPARATION AND FOUNDATION CONSTRUCTION BEFORE UNPACKING ALL PARTS.

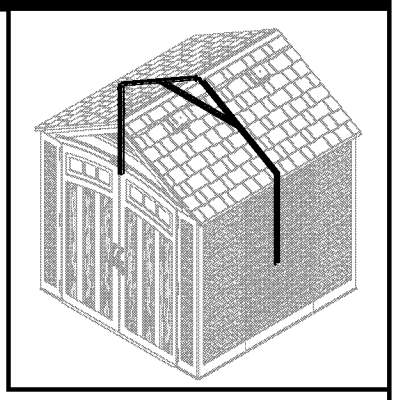

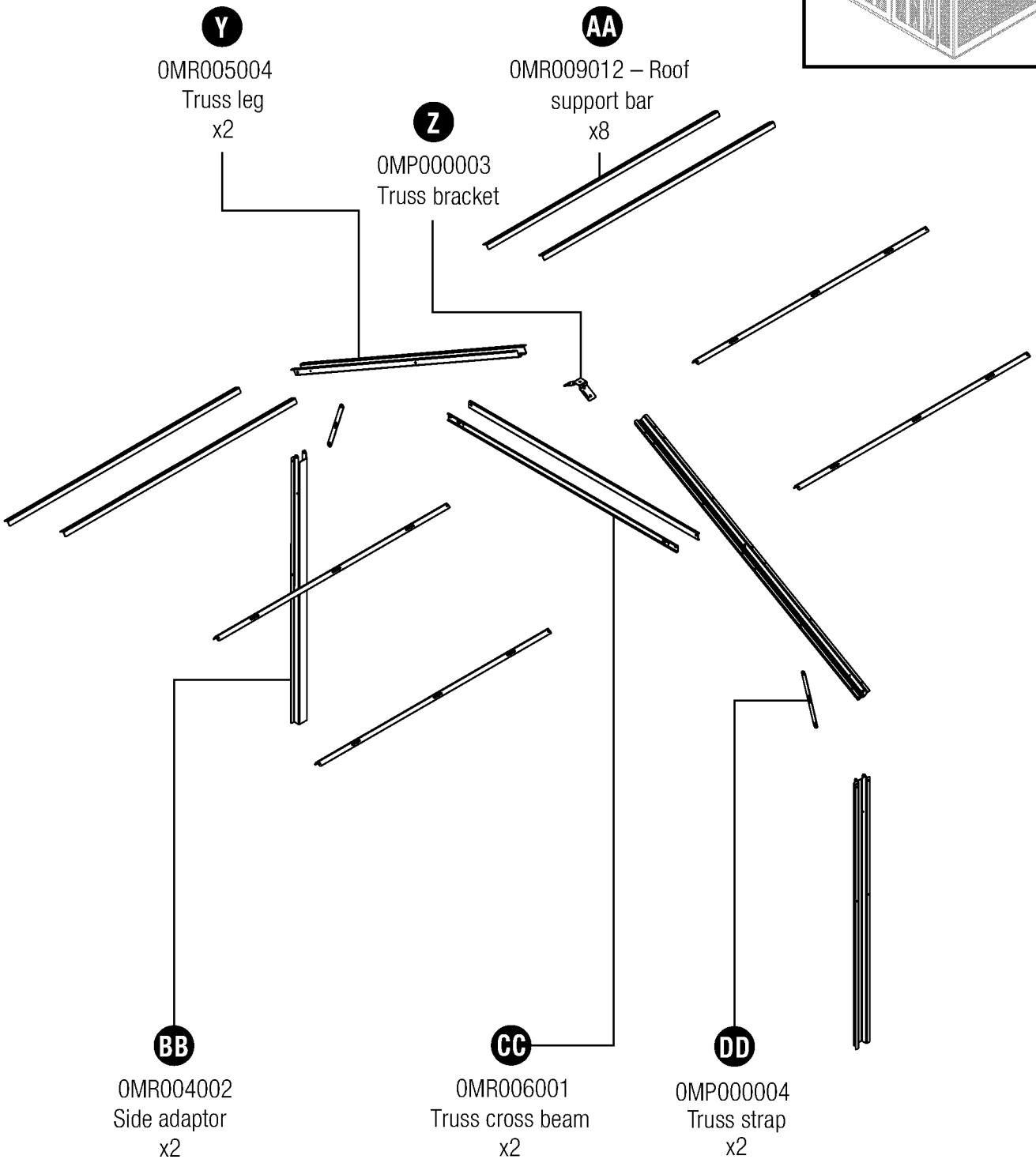

Parts - BMS7702 Roof

IMPORTANT

OPEN ALL BOXES FIRST AND NEATLY LAYOUT PARTS. SMALL PARTS MAY BE CONTAINED IN EACH BOX. PLEASE REFERENCE THE PARTS LIST WITHIN THIS MANUAL TO VERIFY ALL PARTS ARE PRESENT.

COMPLETE SITE PREPARATION AND FOUNDATION CONSTRUCTION BEFORE UNPACKING ALL PARTS.

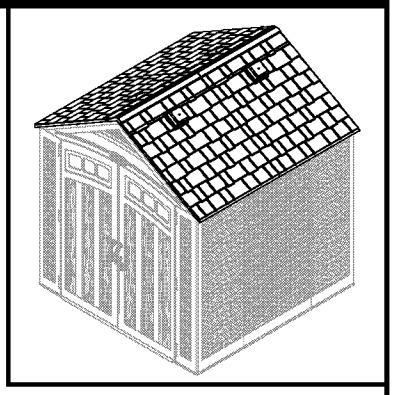

L
0B00442 – Left roof
x2

FF
0440691 – Skylight
gasket
x4

EE
0102231 – Skylight
x2

W
0B00452 – Rear
roof peak

GG
010247507 – Illumivent™
cover
x2

Q
0B00443 – Front
roof peak

HH
010247607 – Illumivent™
base
x2

M
0B00441 – Right roof
x2

Hardware - BMS7702

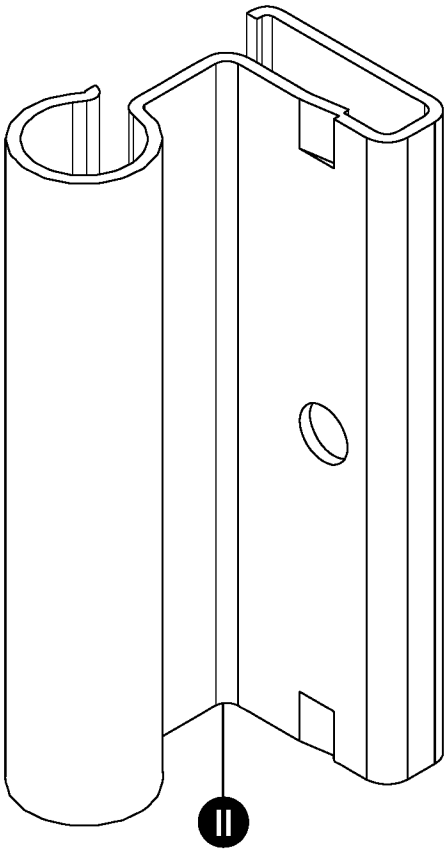

0MP000002 – Metal hinge plate
x6

0480340 – Hardware bag

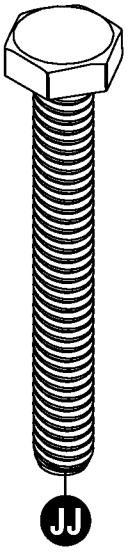

.25" x 2" Hex bolt
x4

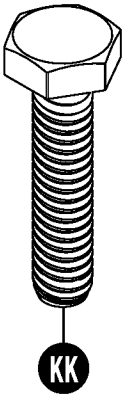

.25 - 20 x 1" Hex bolt
x2

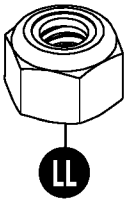

.25" Locking nut
x6

0480375 – Hardware bag

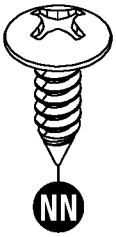

.625" Screw
x210

0480374 – Hardware bag

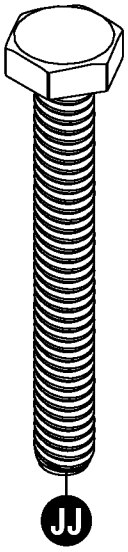

.25" x 2" Hex bolt
x2

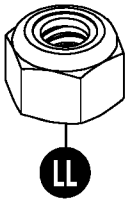

.25" Locking nut
x2

0480337 – Hardware bag

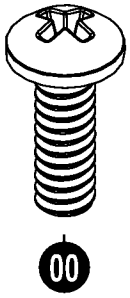

.25" x .75" Screw
x6

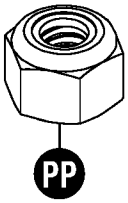

.25" Locking nut
x6

0480452 – Hardware bag

#8 x .625 Screw
x9

0480446 – Hardware bag

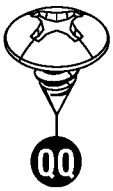

#10 x .375 Screw
x22

0480437 – Hardware bag

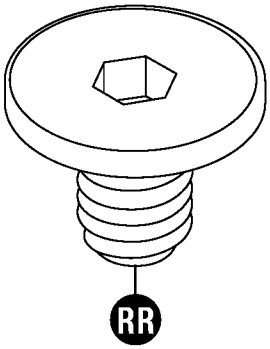

Easy bolt 7/8"
x28

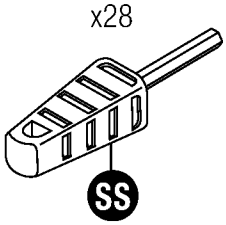

*Easy bolt easy driver

0480438 – Hardware bag

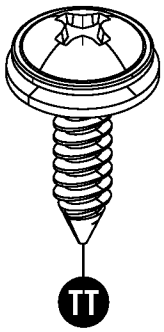

#10 x .75" Screw w/ washer
x22

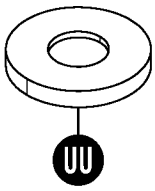

#10 Rubber sealing washer
x22

Hardware shown at actual size (*unless otherwise noted). Extra hardware provided. Not all are used.

Door Handle Kit - Parts - BMS7702

0463795 – Door handle kit

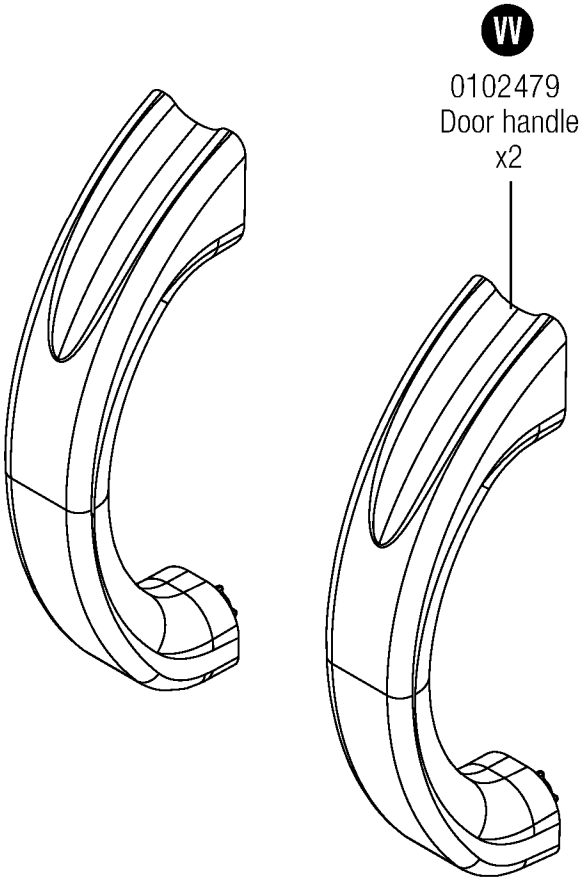

0463797 – Door latch kit

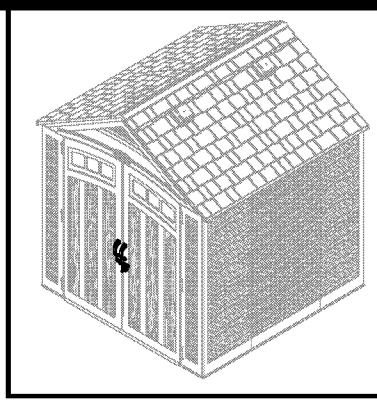

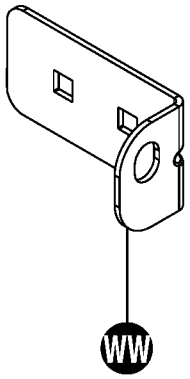

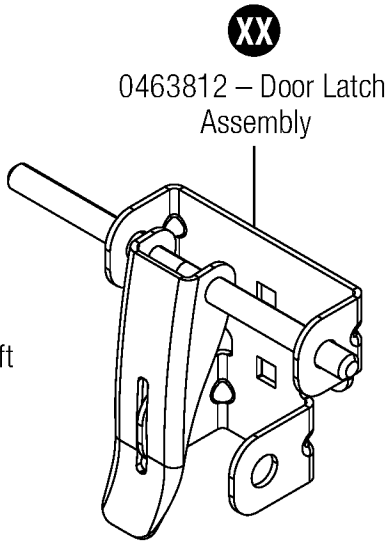

Hardware

0480370 – Hardware bag

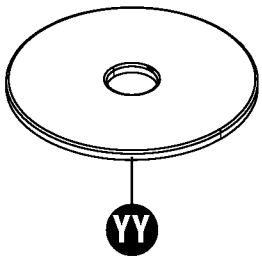

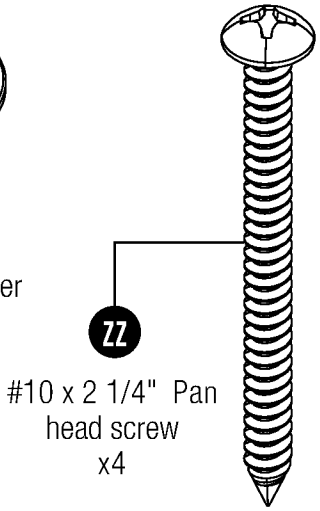

0480439 – Hardware bag

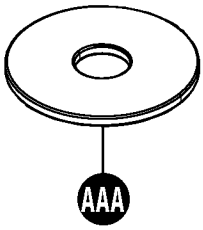

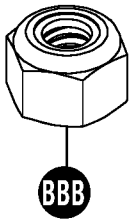

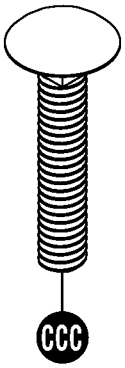

Hardware shown at actual size (*unless otherwise noted). Extra hardware provided. Not all are used.

Site Preparation and Platform Construction

Materials **NOT** supplied with BMS7702 Shed Kit

Note: *Site preparation is required for this shed. Placing the shed on a constructed foundation is required. Without a constructed foundation, settling will probably occur, causing distortion and damage to the shed. Suncast is not responsible for replacing parts damaged or property lost due to incorrect assembly. Warranty requires foundation.*

Note: *Complete the site preparation and foundation construction before unpacking parts and beginning assembly. For tips on site preparation, go to www.suncast.com, consult retailer, or local code.*

To prepare your shed site, follow the steps below:

1) Consult your local authorities for building codes and covenants before beginning foundation or erecting shed.

2) Before any digging, check with local utilities to determine location of buried cables, pipes, etc.

3) Decide which type of foundation you want:
   - Concrete slab, 4" thick

OR

   - Wood platform
     Use exterior grade wood. The wood platform should be set on pier blocks or footing. Consult your local retailer for help to determine the best anchoring method for your particular installation. The provided plans are sized for the minimum number of cuts to lumber and plywood.

4) Prepare the building site:
   - The ground should slope away from the foundation area to provide drainage.
   - The foundation surface must be flat and level.
   - A vapor barrier should be provided to prevent excessive condensation in the shed.
   - Follow local building codes for a proper vapor barrier.

5) Anchoring the shed to the foundation:
   - Consult your local retailer for help to determine the best anchoring method for your particular installation.
   - To secure the shed to a concrete slab, use masonry fasteners available at your local hardware retailer.
   - To secure the shed to a wood platform, use 1/4" x 3" long lag screws with washers.

Anchoring floor panel to concrete slab

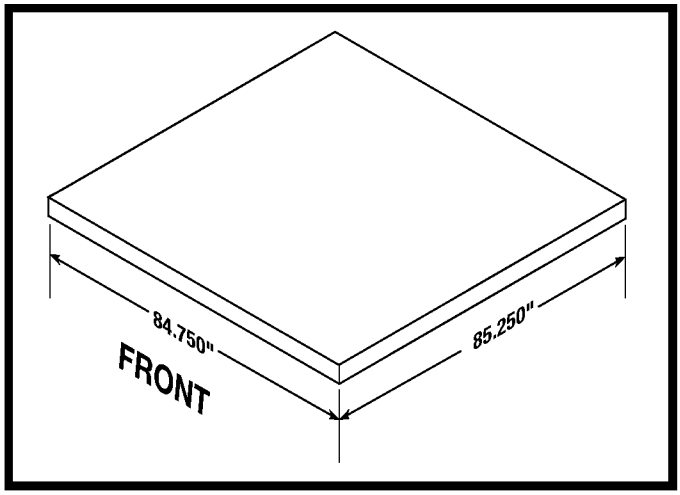

- Secure shed to concrete slab using masonry fasteners.
- Dimensions allow for shed to fit within the nearest 1" on each side.

Anchoring floor panel to wood platform

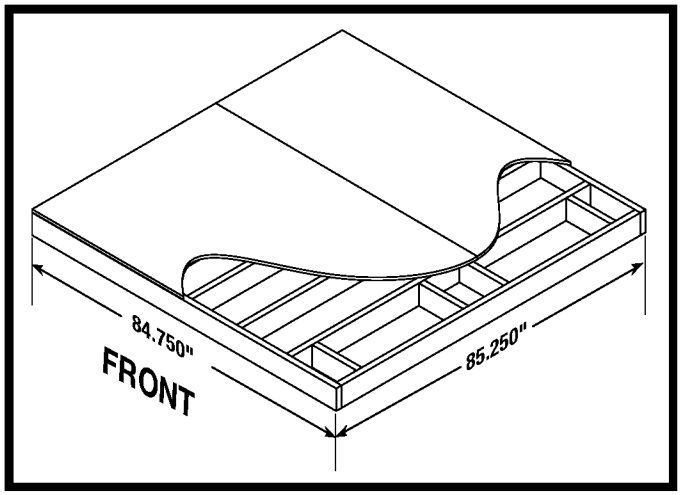

- Secure shed to wood platform using 1/4" x 3" lag screws.

Site Preparation and Platform Construction (continued)

Materials **NOT** supplied with BM7702 Shed Kit

Wood platform critical spacing

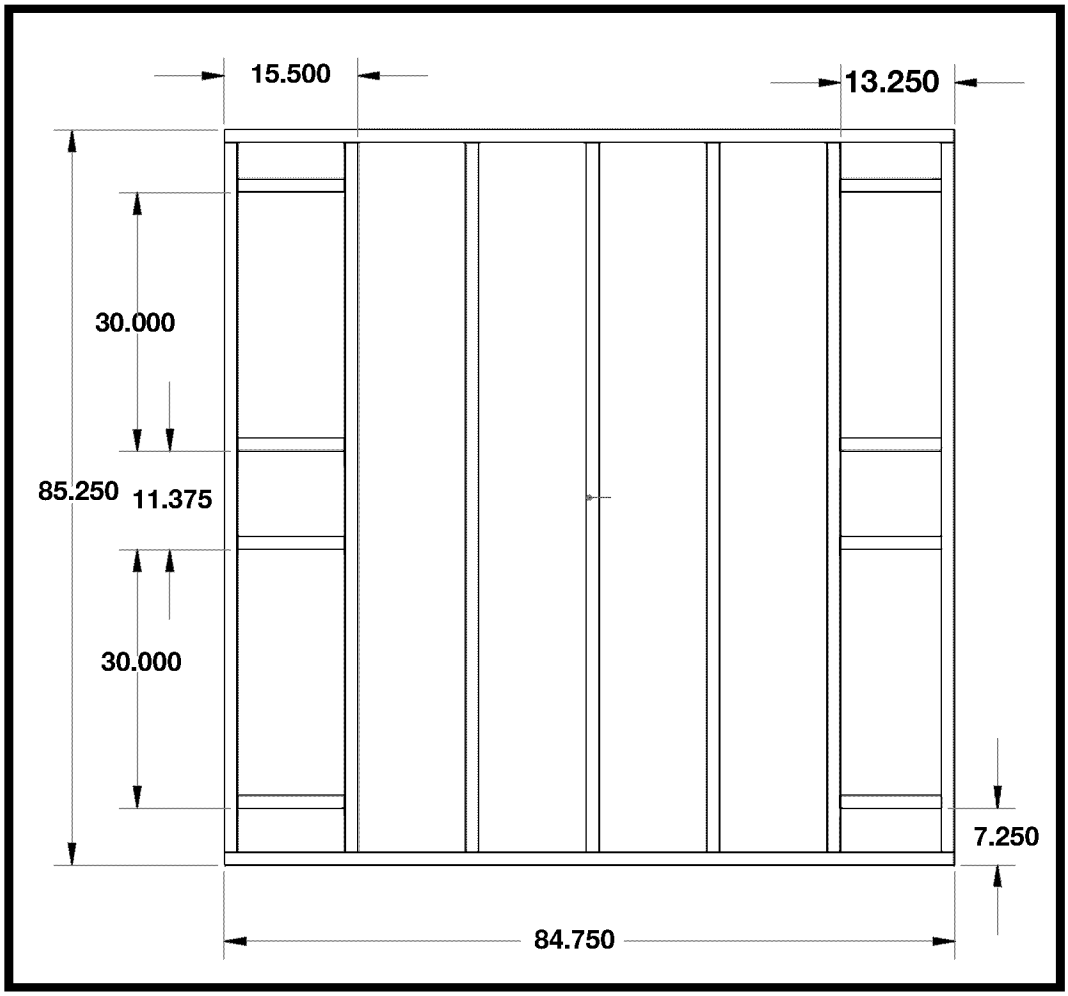

- Check all critical spacing measurements.

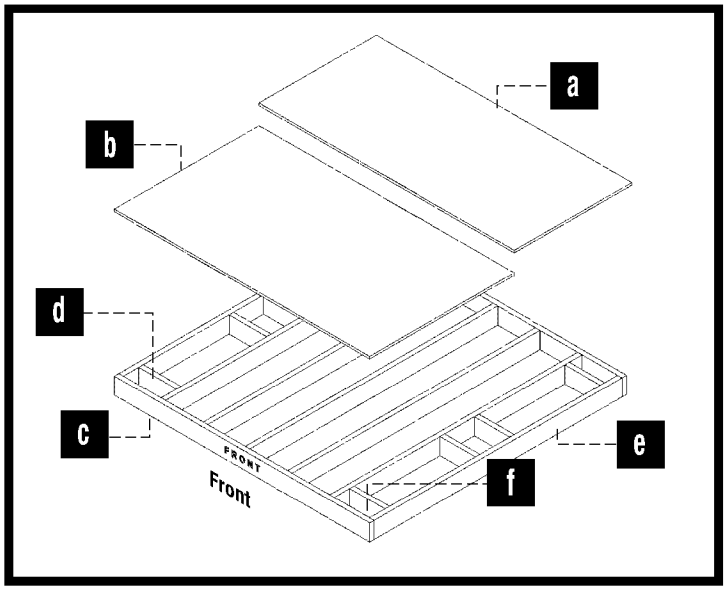

Wood platform materials list

Item	Qty	Size
a	1	37.25" x 84.75" x .75"
b	1	48" x 84.75" x .75"
c	2	2" x 6" x 84.75"
d	4	2" x 6" x 12.5"
e	7	2" x 6" x 82.25"
f	4	2" x 6" x 11.75"

- Please note-dimensional lumber is actually 1/2" smaller than noted sizes.

Door Pre-Assembly

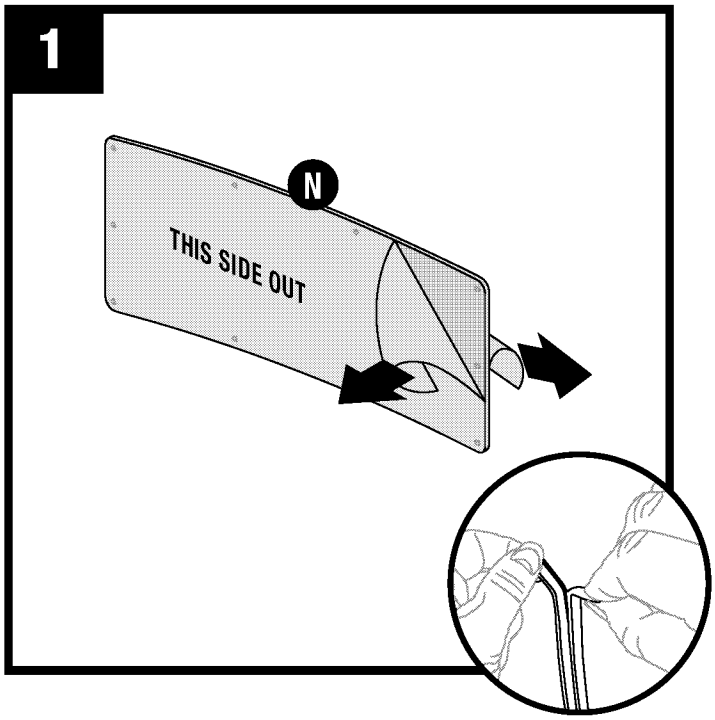

Peel film from both sides of left door window (N).

Note: *One side of film will say "THIS SIDE OUT." Make sure this side faces out when installing window.*

Separate the two window gaskets (P) and peel off backing.

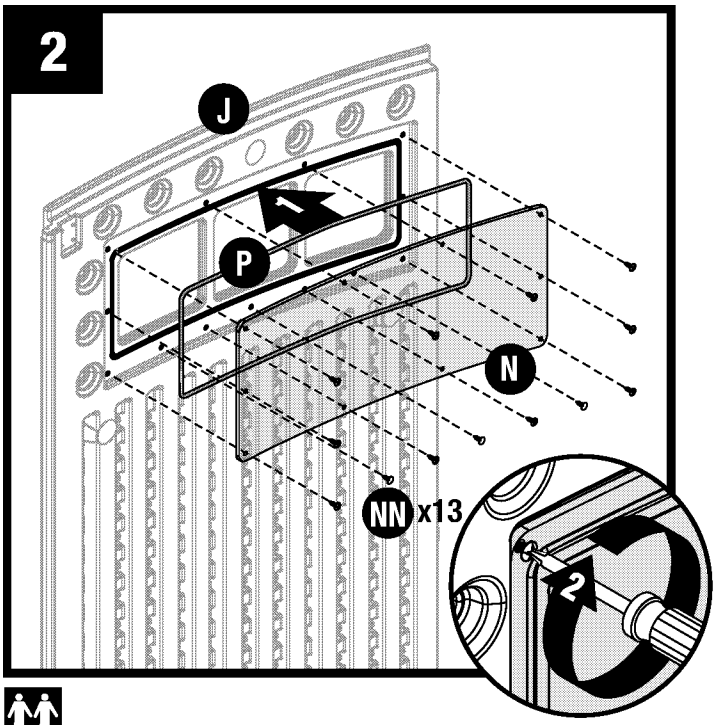

Place gasket (P) and left door window (N) into left door (J) channel. Secure with thirteen screws (NN), starting at corners. **DO NOT** over tighten screws.

Note: *The cut portion of gasket (P)* ***MUST*** *be assembled on top of door channel.*

Repeat for right door (K) and right door window (R).

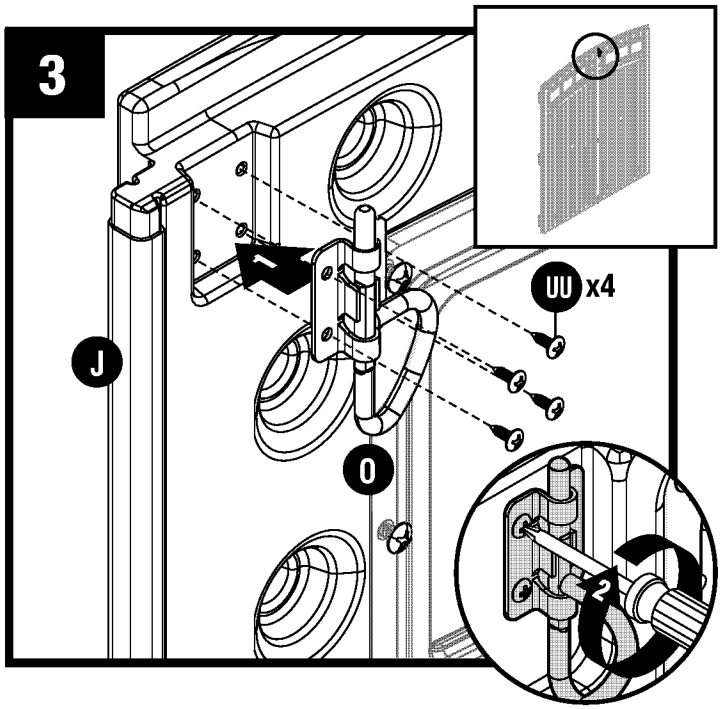

At top interior side of left door (J), attach D-ring slide bolt (O) with four screws (DDD) through provided holes.

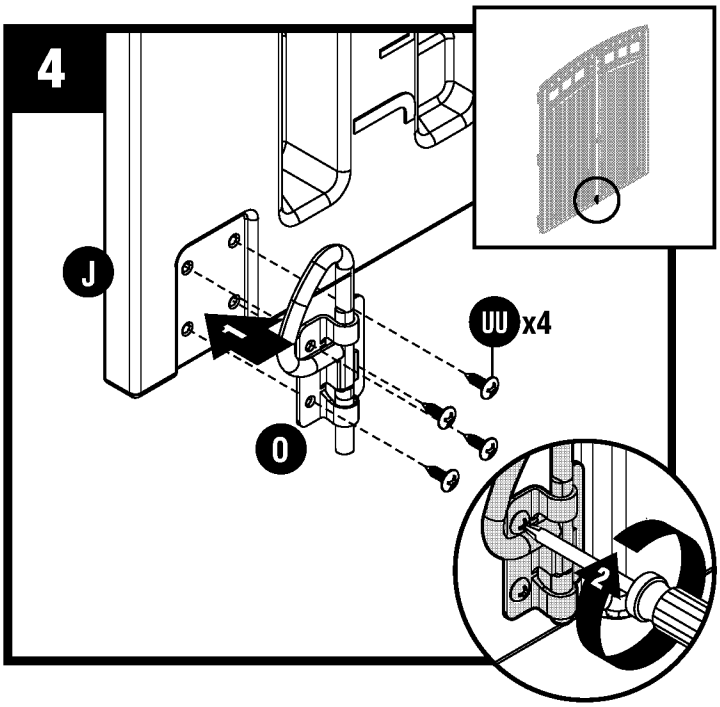

At bottom interior side of left door (J), attach D-ring slide bolt (O) with four screws (DDD) through provided holes.

Header Pre-Assembly

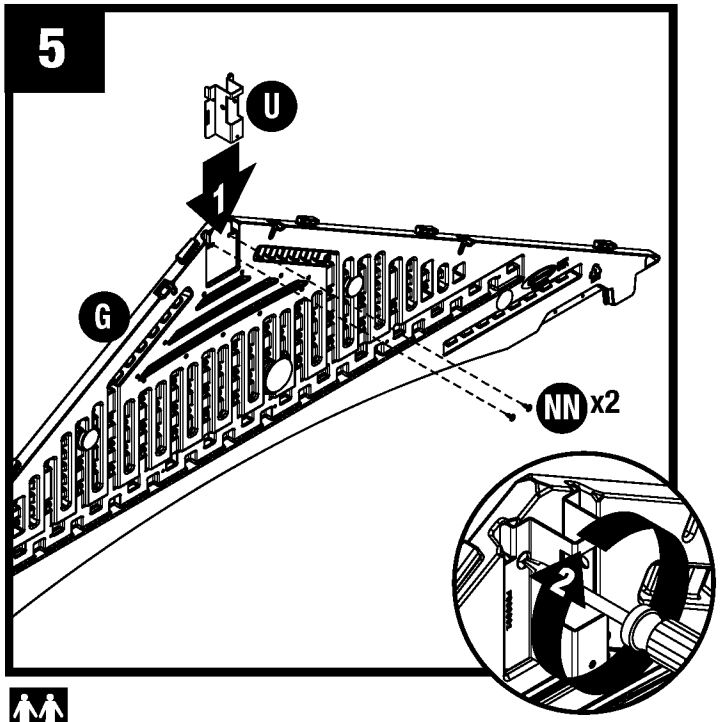

Slide roof ridge beam bracket (U) under tabs on inside peak of front header (G) and secure with two screws (NN). **DO NOT** over tighten screws.

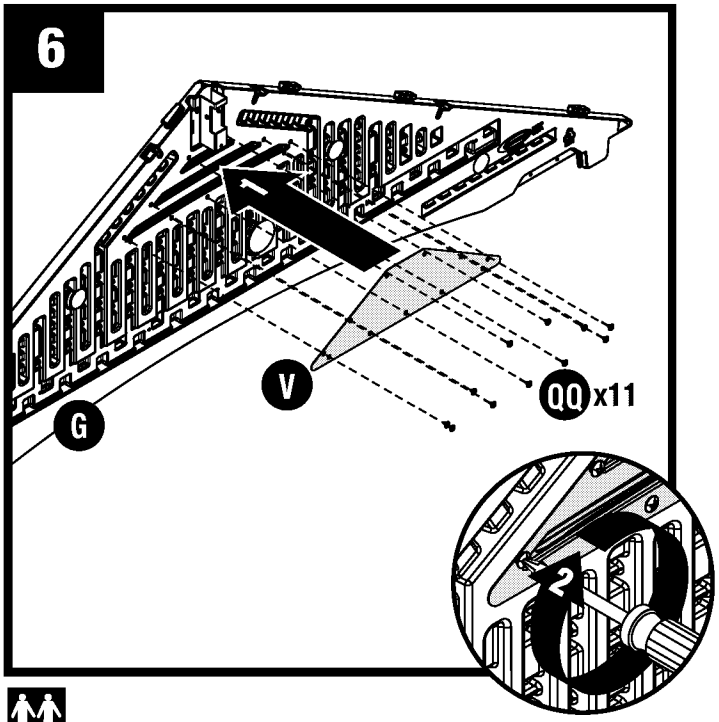

Place vent screen (V) in front header (G). Secure through back of header with 11 screws (QQ).
DO NOT over tighten screws.

Repeat for rear header (H).

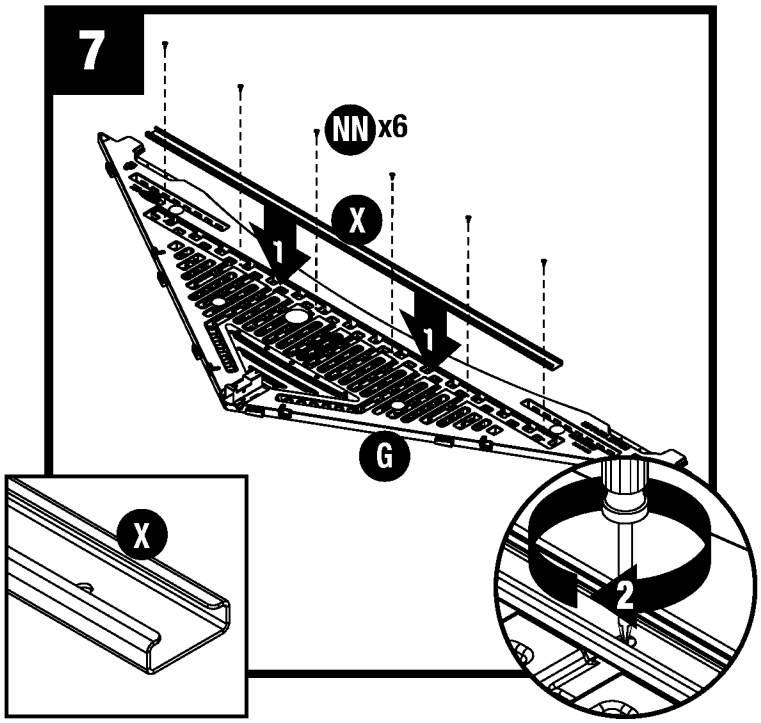

Lay front header (G) on ground with lettering side facing up. Place front header beam (X, 57") into pocket on inside of front header (G). Attach with six screws (NN).
DO NOT over tighten screws.

Repeat for rear header (H) and rear header beam (EEE, 62").

Roof and Truss Pre-Assembly

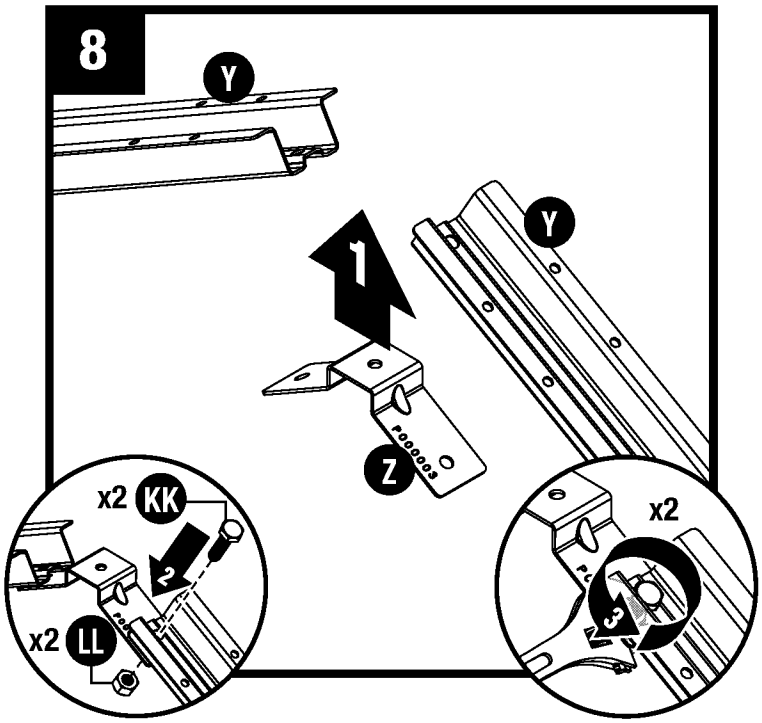

Attach truss bracket (Z) to end of one truss leg (Y) with 1" hex bolt (KK) and locking nut (LL).

Repeat for second truss leg (Y).

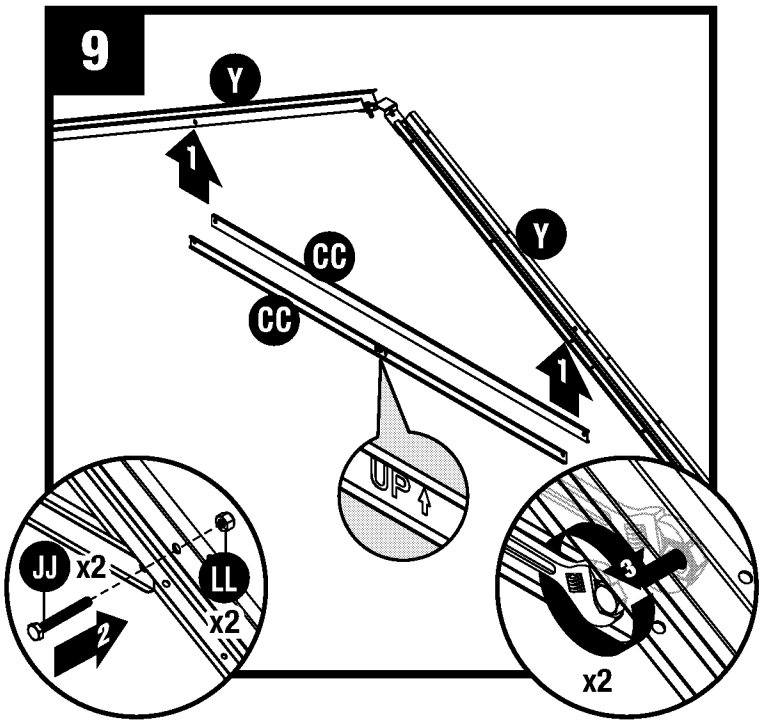

Attach two truss cross beams (CC) to two truss legs (Y) using two hex bolts (JJ) and two locking nuts (LL). Stand truss and check cross beam is level.

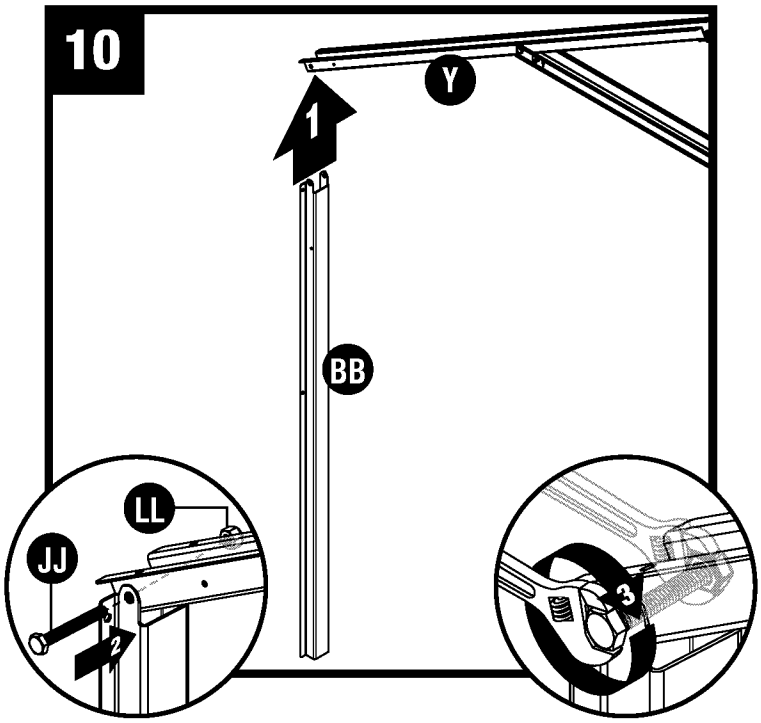

Place side adaptor bracket (BB) at end of left truss leg (Y). Secure adaptor bracket with one 2" hex bolt (JJ) and one locking nut (LL). Repeat for other truss leg.

***Note: DO NOT** over tighten side adaptor bracket (BB) onto end of truss legs (Y). This makes roof assembly difficult.*

Skylight and Wall Pre-Assembly

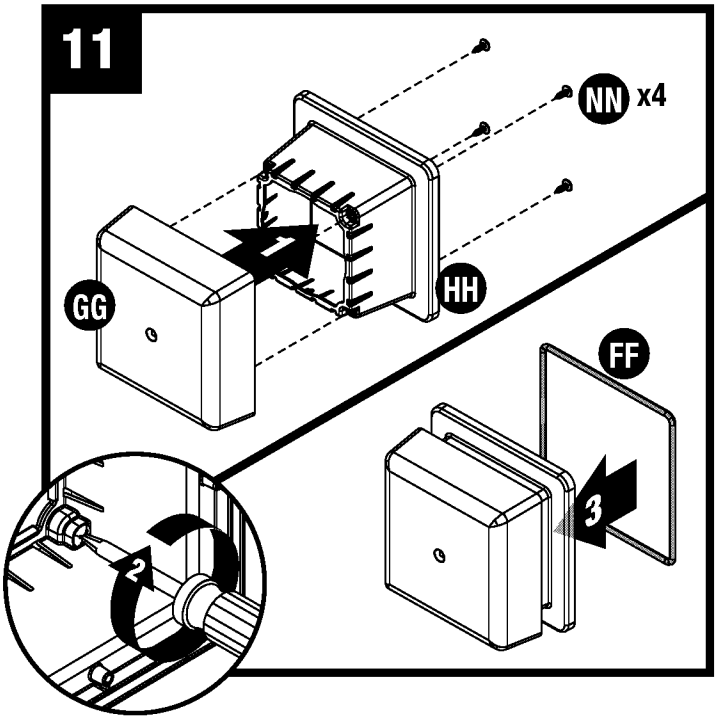

Place Illumivent™ cover (GG) onto bottom (HH). Secure from underside with four screws (NN). Place gasket (FF) into Illumivent™ bottom (HH).

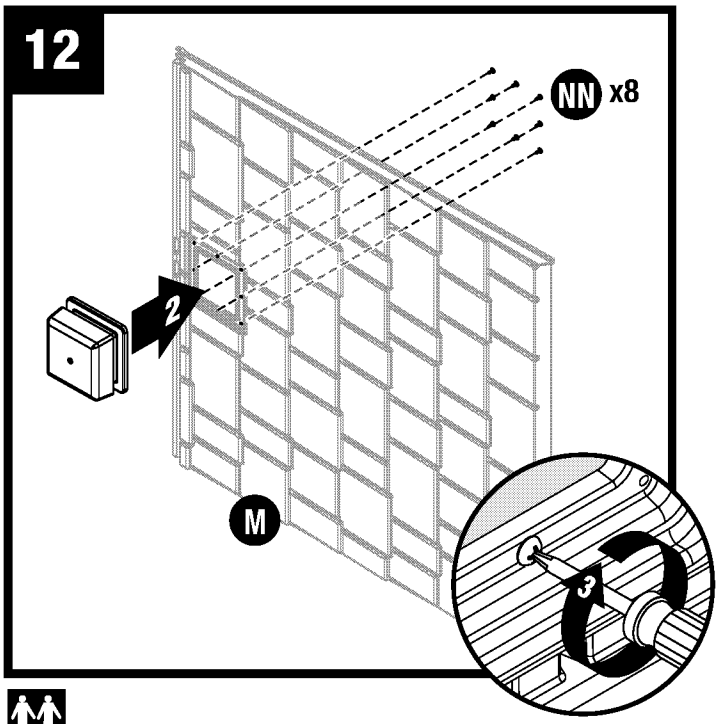

Place Illumivent™ assembly (GG, HH, FF) onto right roof panel (M). Secure from underside with eight screws (NN). Screw corners in first. Make sure rib on plastic parts is seated fully against gasket on Illumivent™ Repeat for remaining right roof panel.

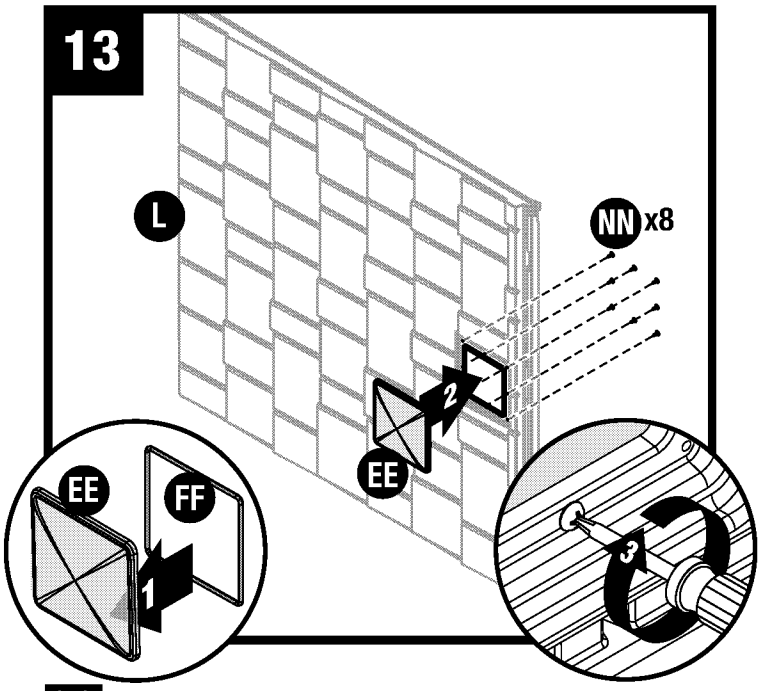

Place skylight gasket (FF) into skylight (EE). Place skylight (EE) onto left roof panel (L). Secure from underside with eight screws (NN). Screw corners in first. Make sure rib on plastic parts is seated fully against gasket on skylight. Repeat for remaining left roof panel.

Shed Assembly/Walls

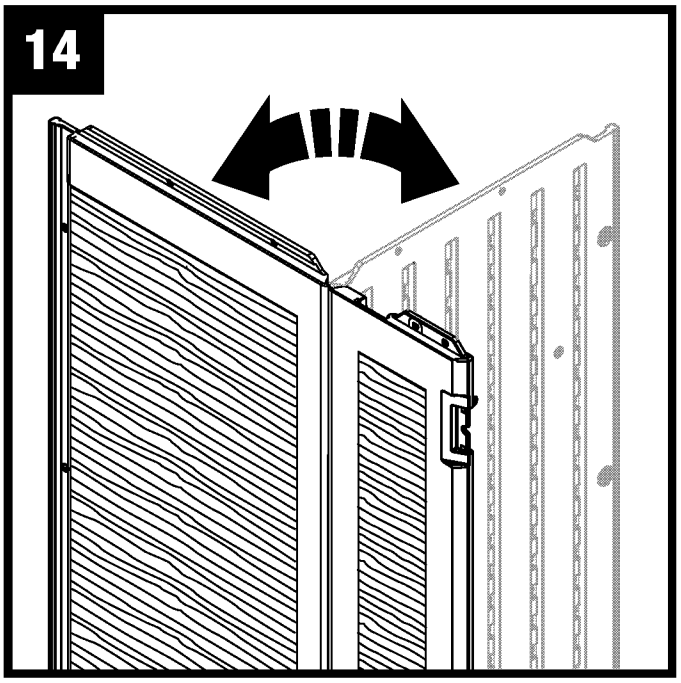

Critical: When installing corners, flex corner hinges back and forth several times. This will help provide a square corner and ensure proper fit of remaining panels.

Important: DO NOT flex in reverse position, as this can crack the panel.

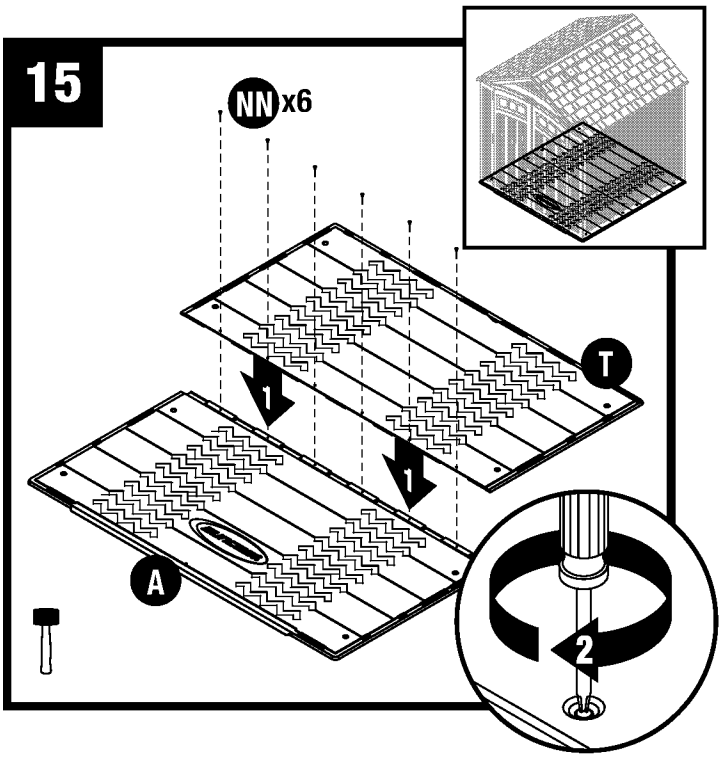

Push front floor (A) and rear floor (T) panels together and secure with six screws (NN).

Note: *Refer to pages 11 and 12 for information about how to secure floors to foundation.*

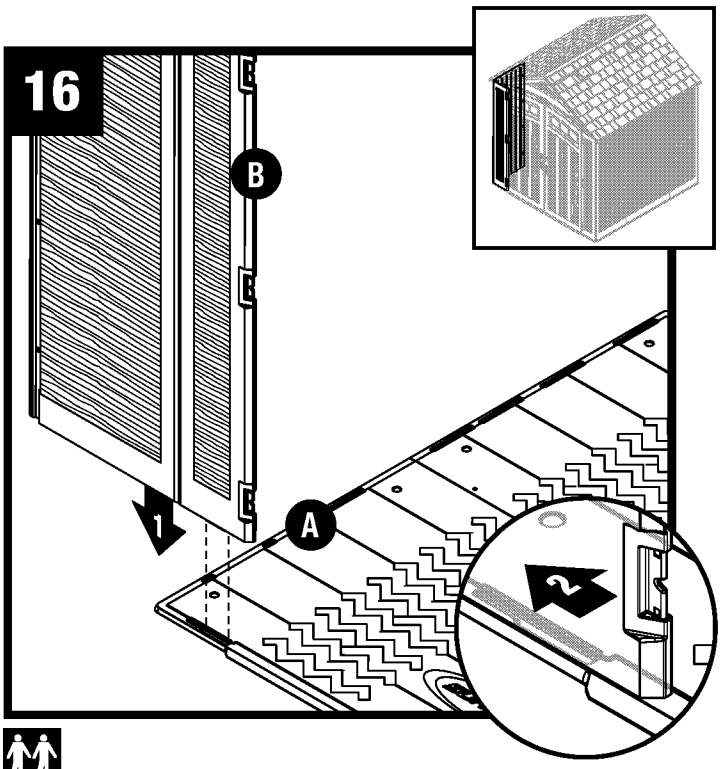

Align tab on bottom right side of left front corner (B) with slot on front floor (A). Lower panel into slot and lock in place by sliding panel toward outside of floor.

Note: *Use a rubber mallet to "push" left front corner (B) into locked position.*

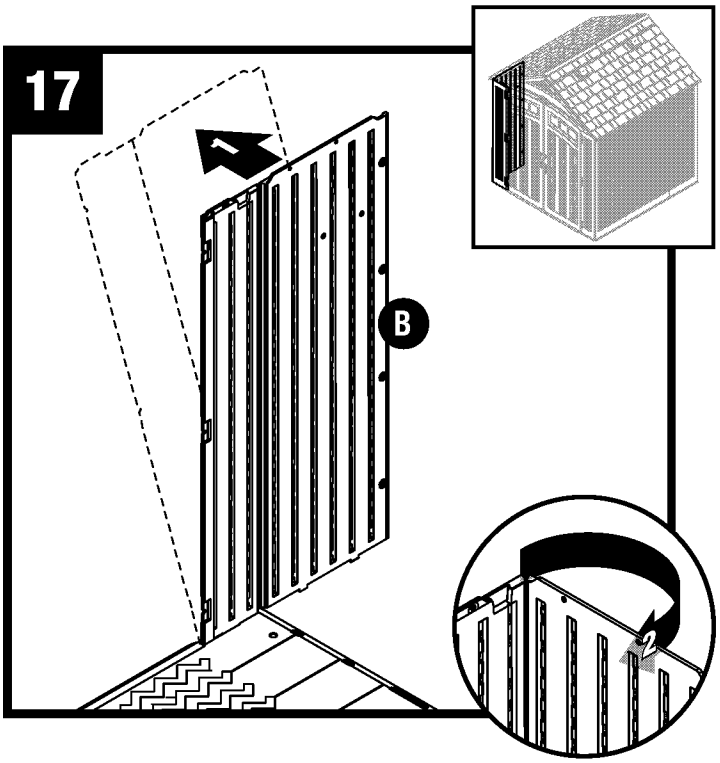

Tip left front corner (B) outward slightly and bend corner hinge.

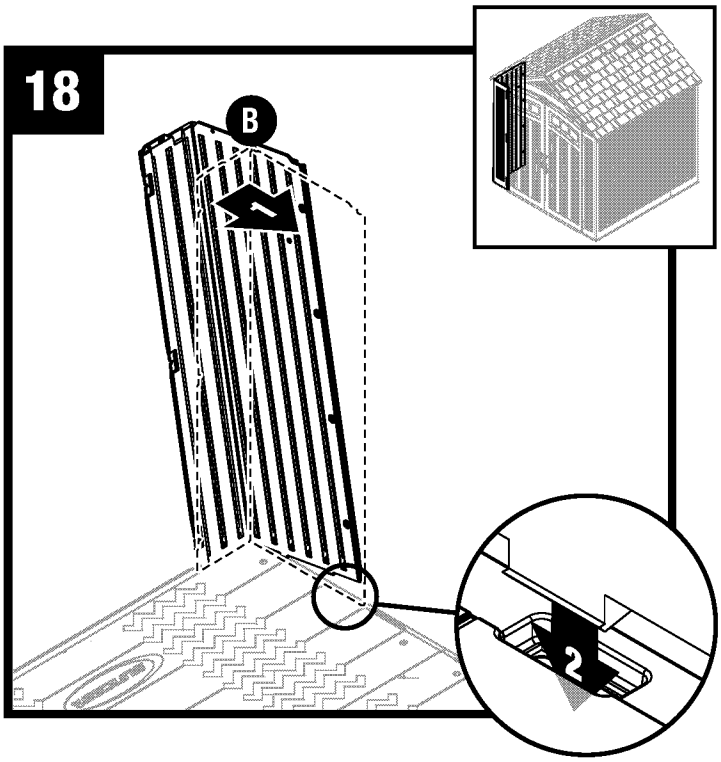

Tip left front corner (B) back to vertical position and align lower tabs on right side with slots in floor.

Note: *You will hear a snap when tab is fully engaged.*

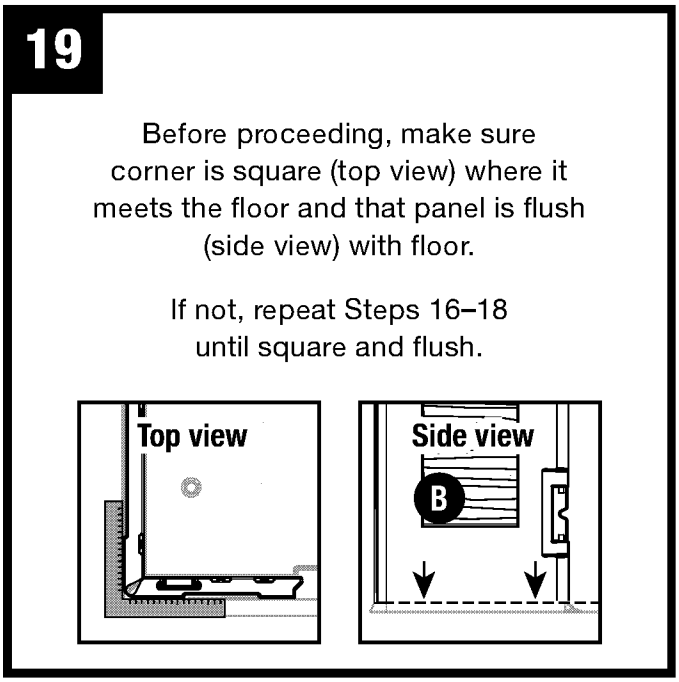

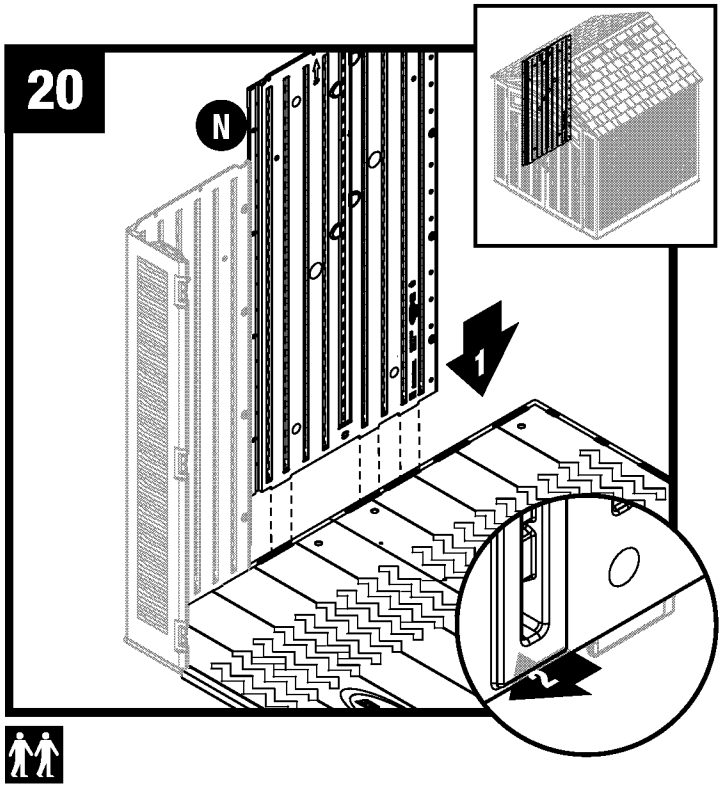

Align tabs on bottom of side panel (N) with slots along front and rear floors. Lower panel into slots and lock in place by sliding panel toward front corner.

Note: *Use a rubber mallet to "push" side panel (N) into locked position.*

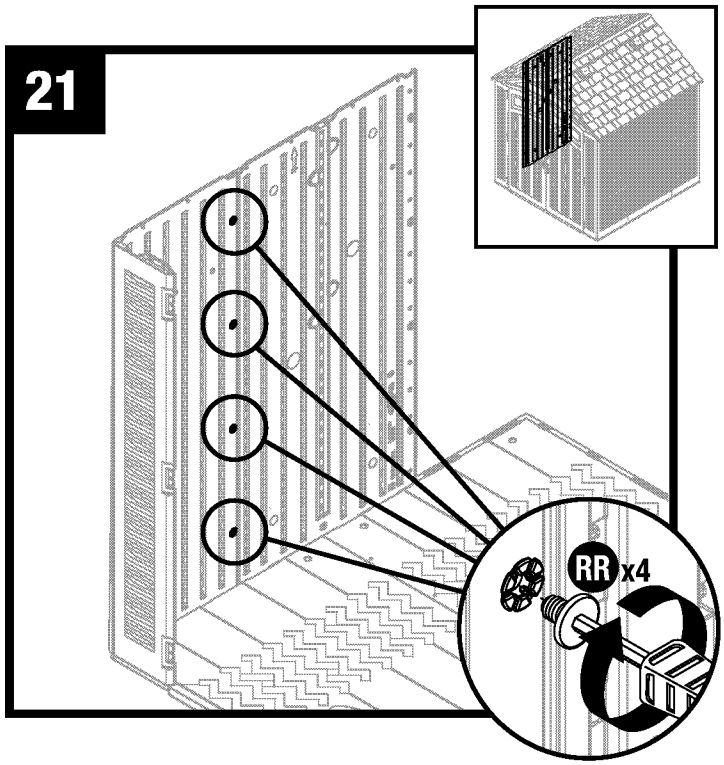

Secure side panel with four easy bolts (RR), working from floor to roof. **DO NOT** use torque wrench. Use easy bolt easy driver (SS) and hand tighten. Easy bolt head will be flush when fully seated. **DO NOT** over tighten easy bolts.

Note: *You may hear a click when easy bolt has been tightened completely.*

22

C

D

D

E

N

F

Hardware Needed

RR x24

Repeat Steps 16-21 for remaining panels.

Shed Assembly/Headers and Truss

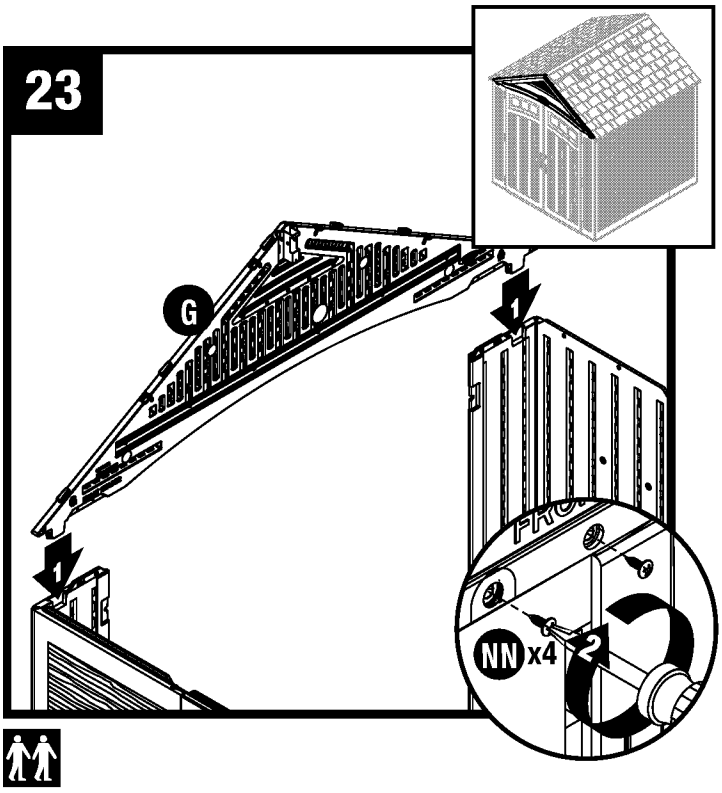

Place front header (G) over door opening and fit two protruding support legs into pockets molded in front corners. Secure front header using two screws (NN) in each front corner.

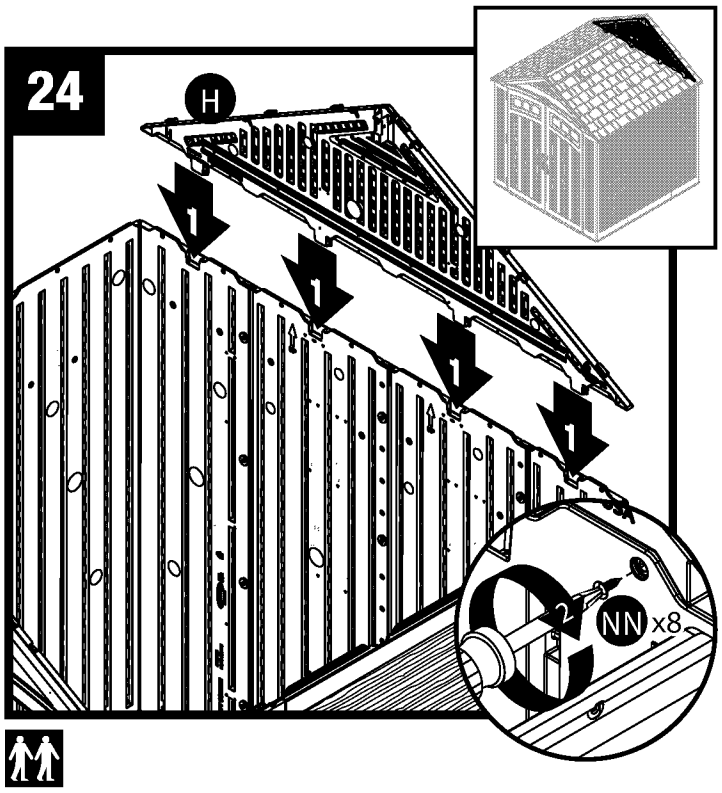

Place rear header (H) over back walls and fit four protruding support legs into pockets molded in back walls. Secure rear header using eight screws (NN).

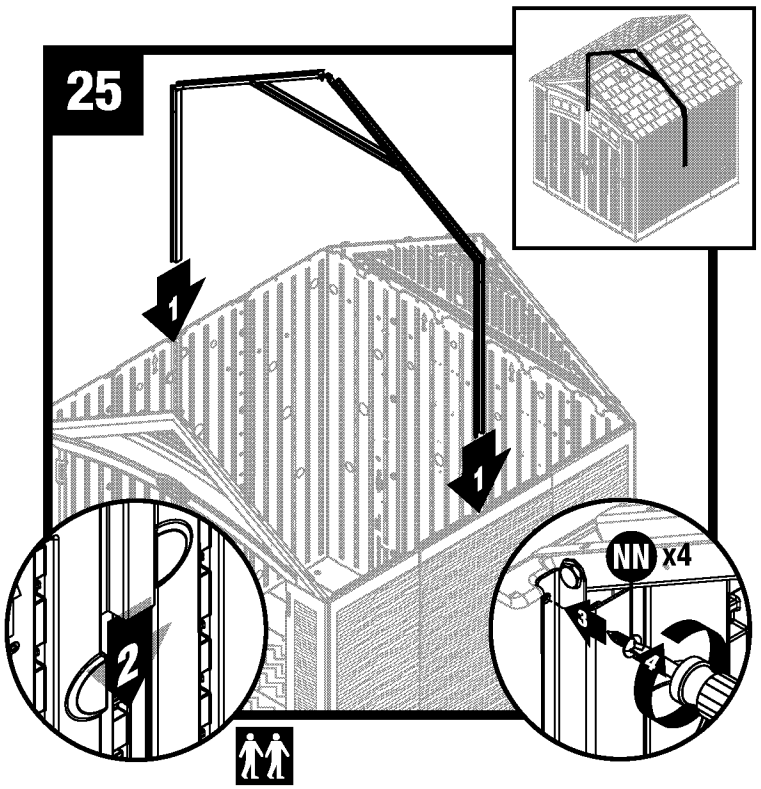

Slide truss assembly into place. Secure with four screws (NN) in each side adaptor bracket.

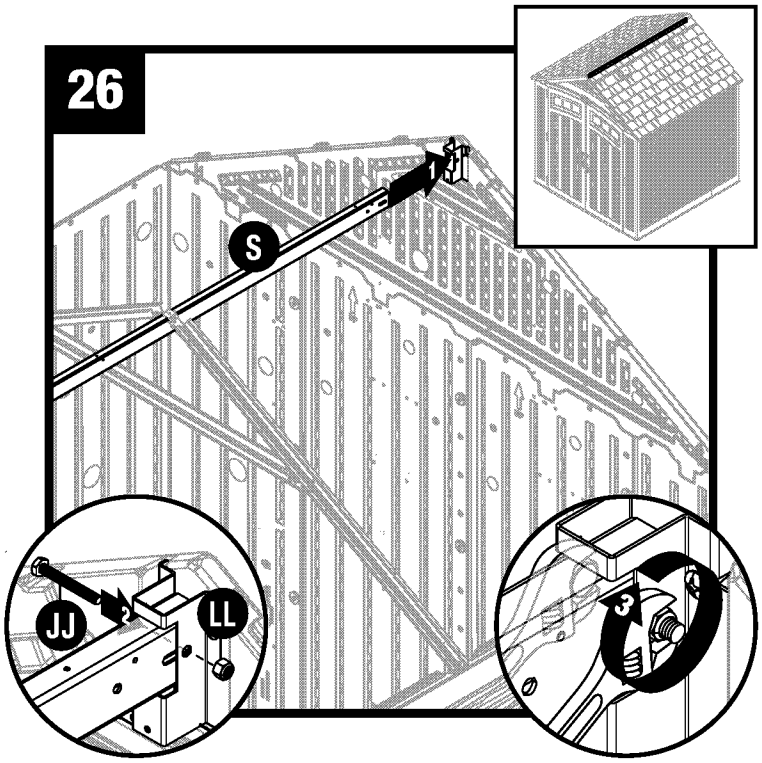

Raise ridge beam (S) up and into rear roof ridge beam bracket. Secure with one 2" hex bolt (JJ) and one locking nut (LL). Repeat with front ridge beam bracket.

Note: *Make sure open end of ridge beam faces down.*

Note: *Alignment of ridge beam to bracket may require header panels to be pushed inwards or outwards slightly as ridge beam is slid into place.*

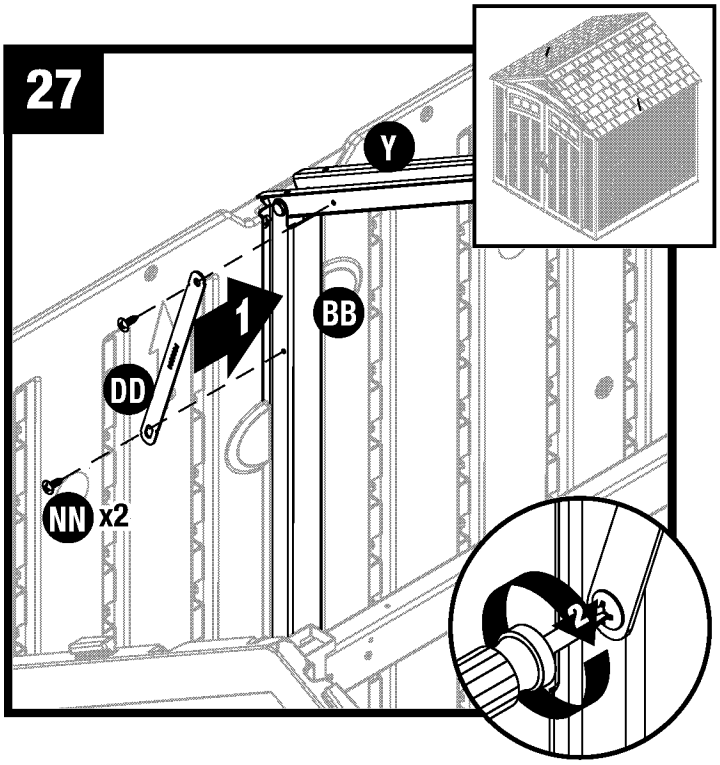

Attach truss strap (DD) to side adaptor bracket (BB) and truss leg (Y) with two screws (NN).

Repeat for remaining truss strap.

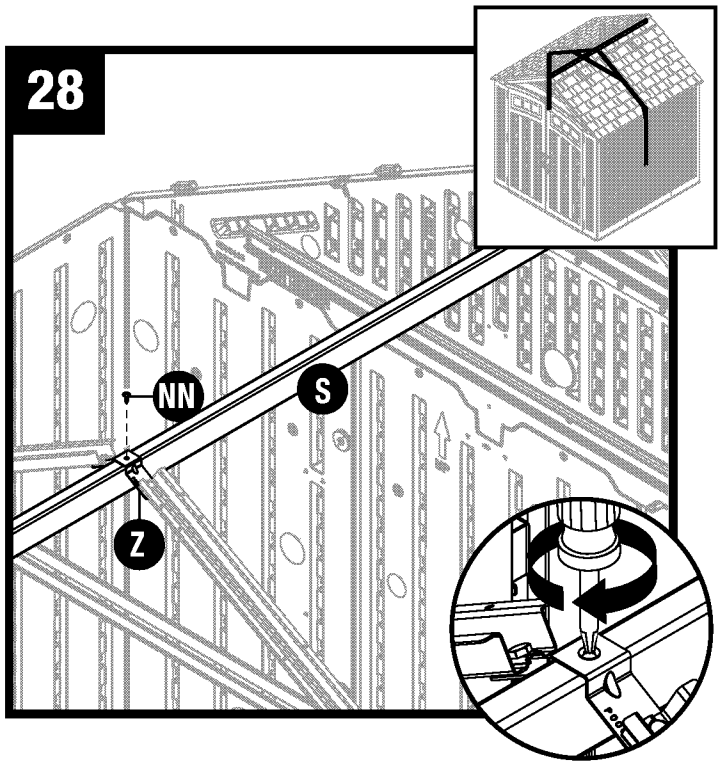

Attach truss bracket (Z) to ridge beam (S) with one screw NN.

Shed Assembly/Roof

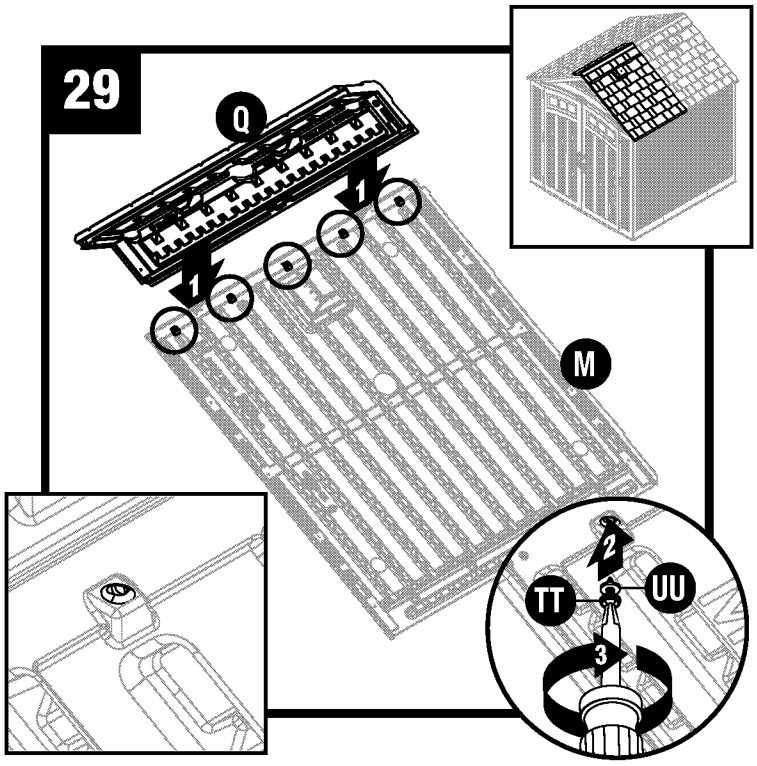

Place the front roof peak (Q) onto a right roof panel (M). Secure with five rubber washers (UU) and five sealing screws (TT). Repeat for rear roof peak (W) and remaining right roof panel (M).

Note: *Rubber side of washer should be against plastic panel.*

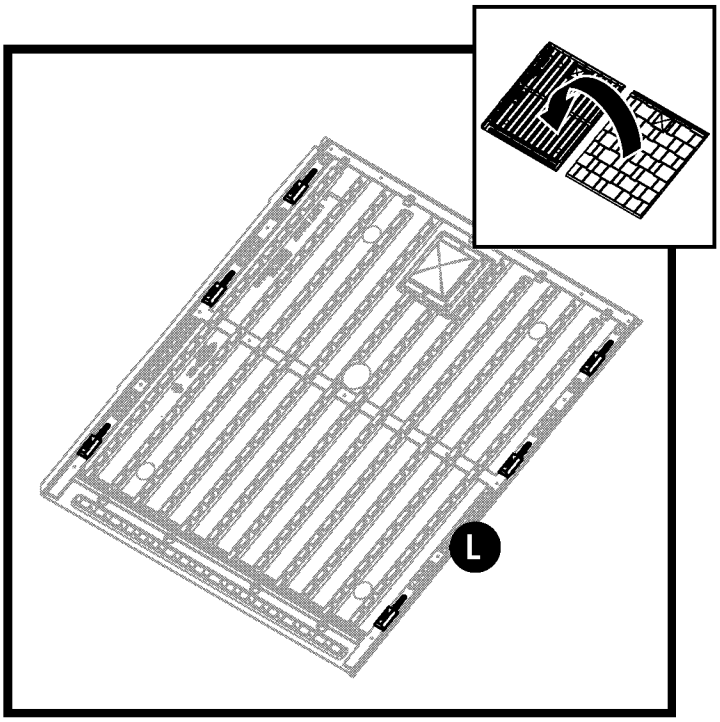

Before proceeding, locate and identify the six slots on interior side of left roof panels (L).

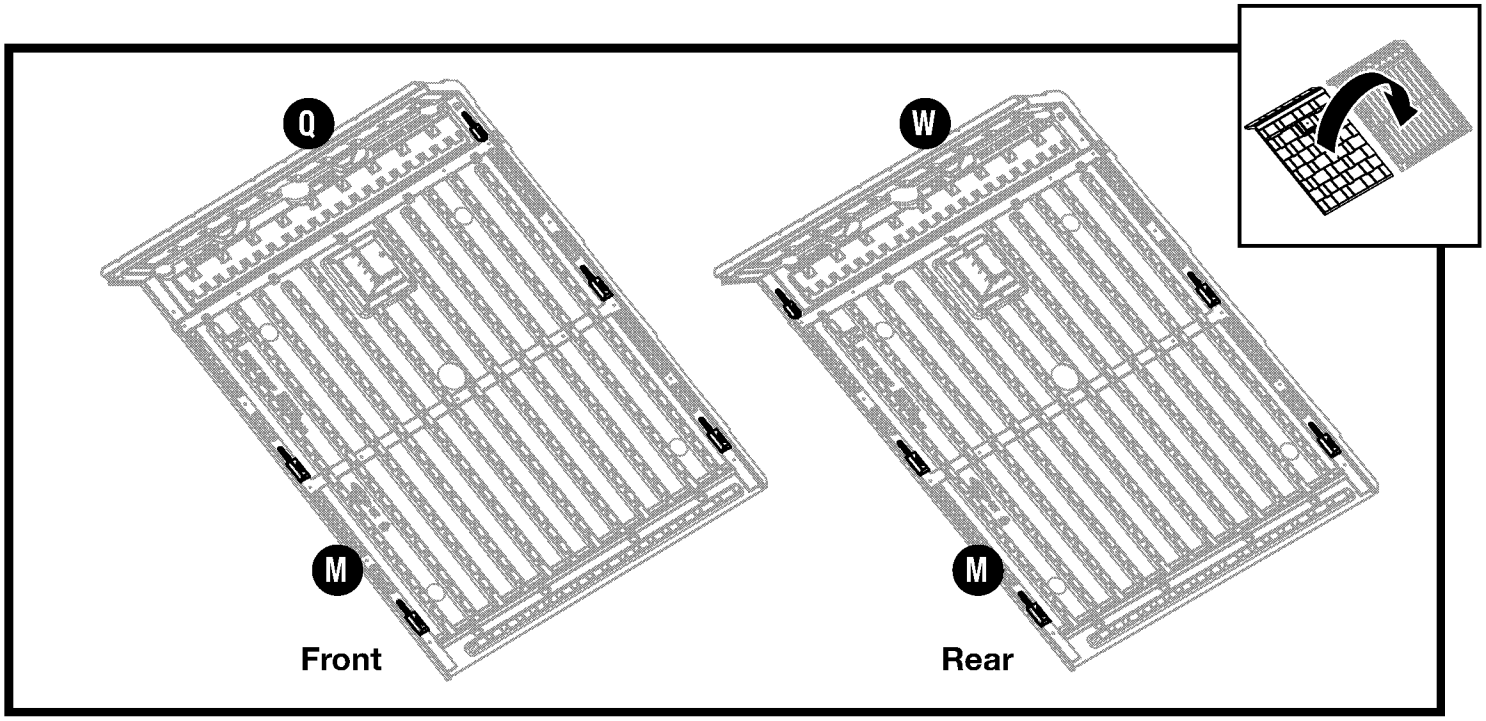

Before proceeding, locate and identify the five slots on interior side of right front (M,Q) and right rear (M,W) roof panel assemblies.

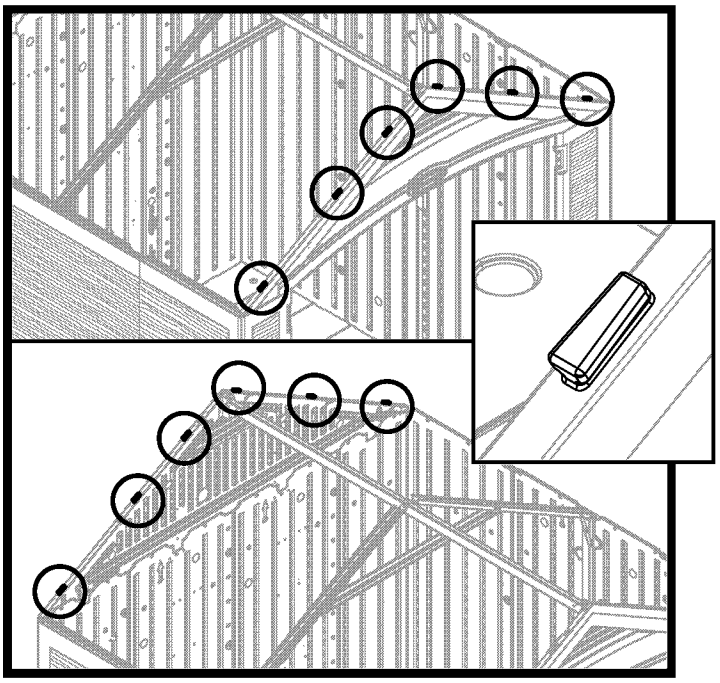

Before proceeding, locate and identify six front header tabs and six rear header tabs.

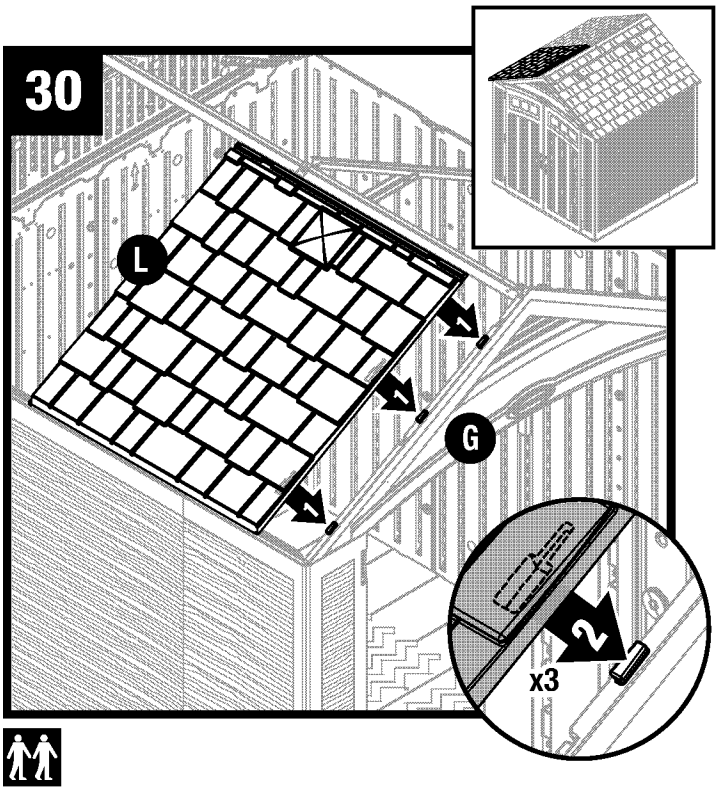

Lay left roof (L) directly over three tabs on left side of front header (G). With left roof slots seated over/on header tabs, check alignment in all three spots.

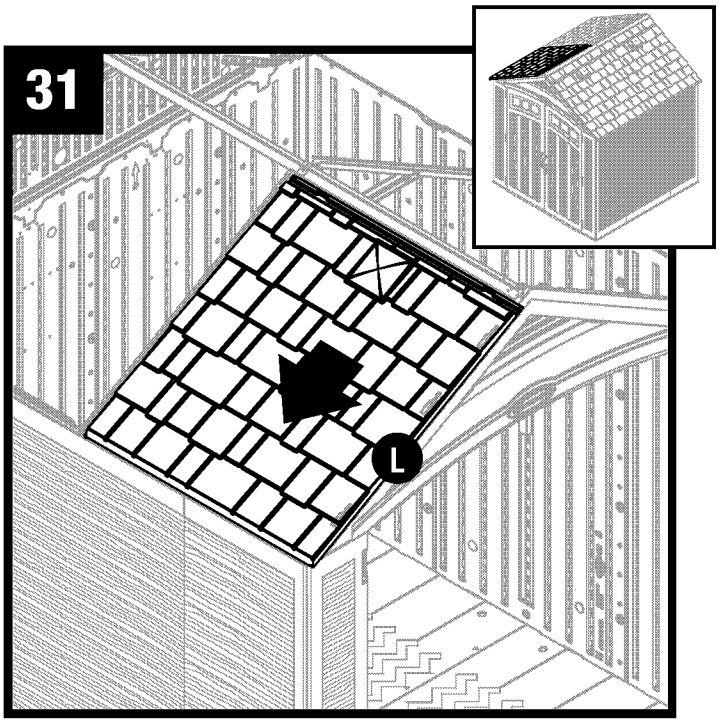

Slide left roof (L) down towards the outside of shed.

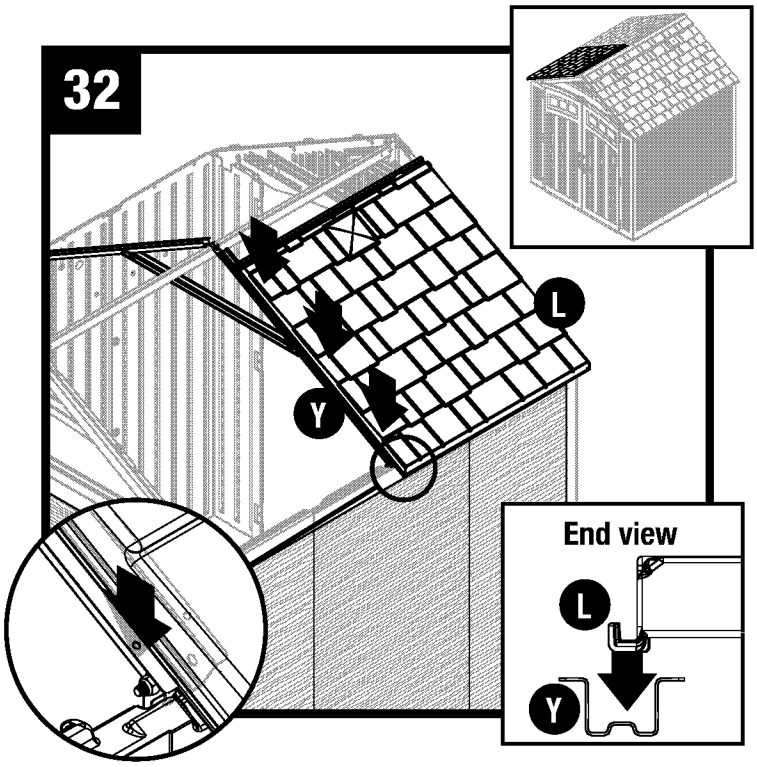

Press edge of left roof (L) into channel on truss leg (Y).

Shed Assembly/Roof (continued)

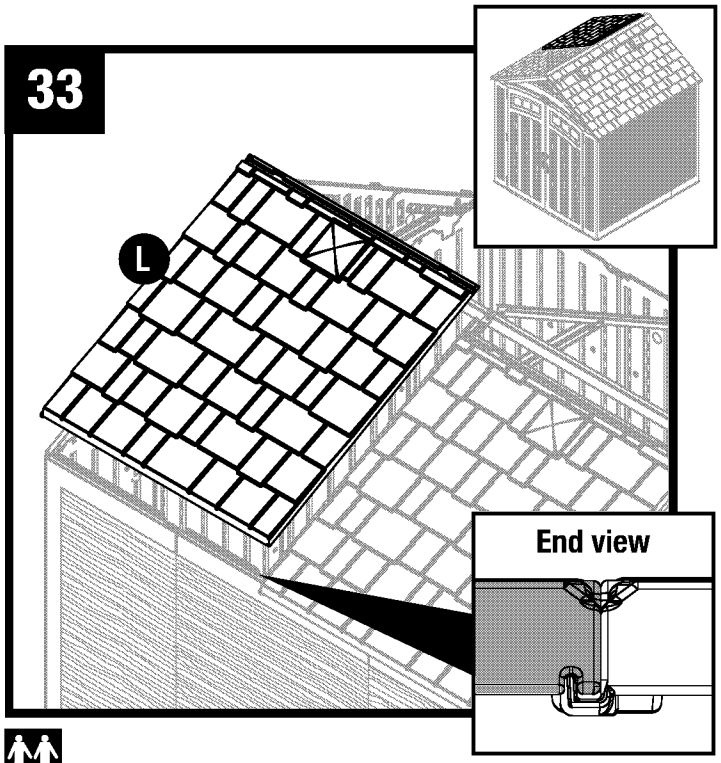

Repeat steps 30-32 for remaining left roof panel (L).

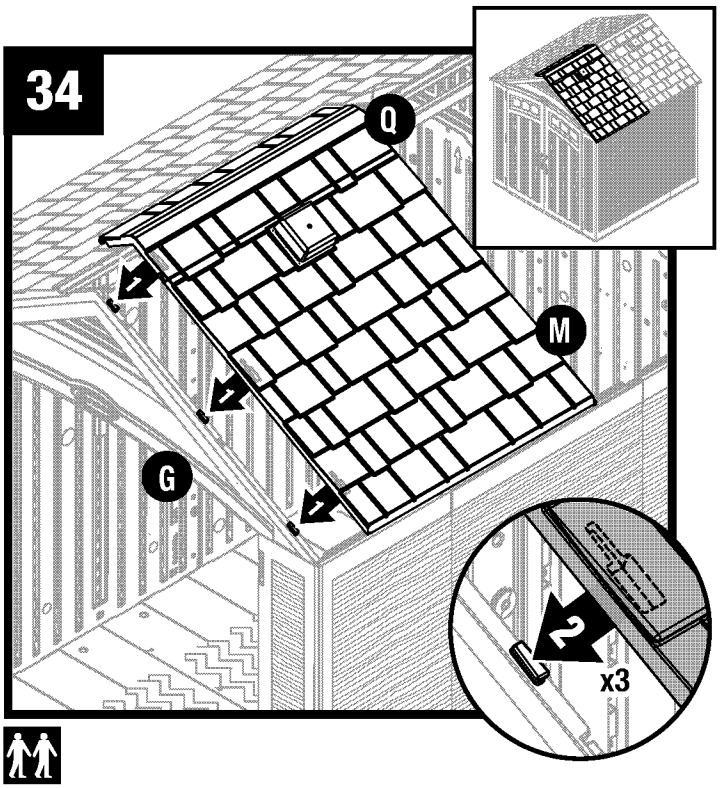

Lay right roof (M) with front roof peak (Q) directly over three tabs on right side of front header (G). With right roof slots seated over/on header tabs, check alignment in all three spots.

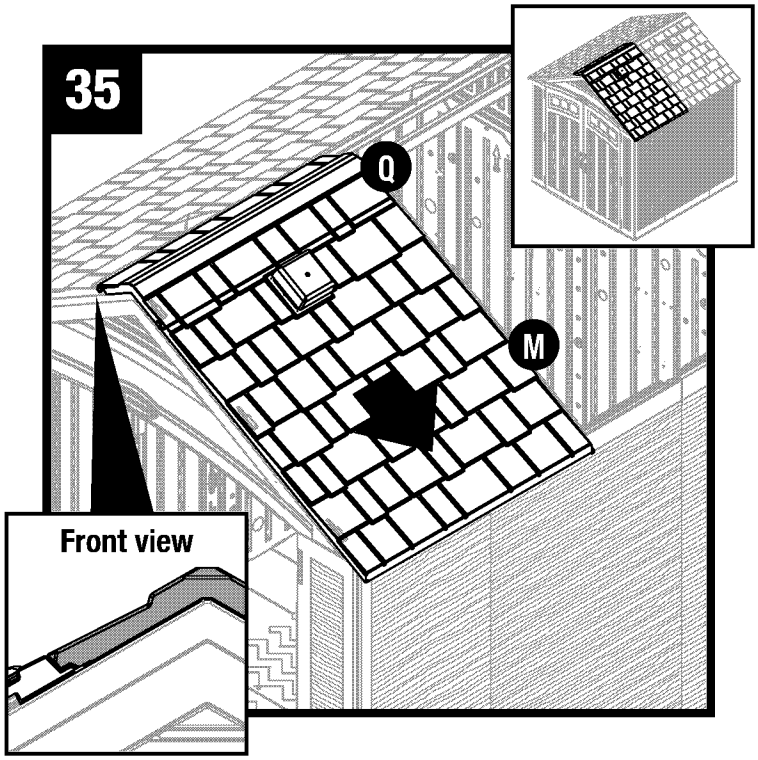

Slide right roof (M) with front roof peak (Q) down towards the outside of shed.

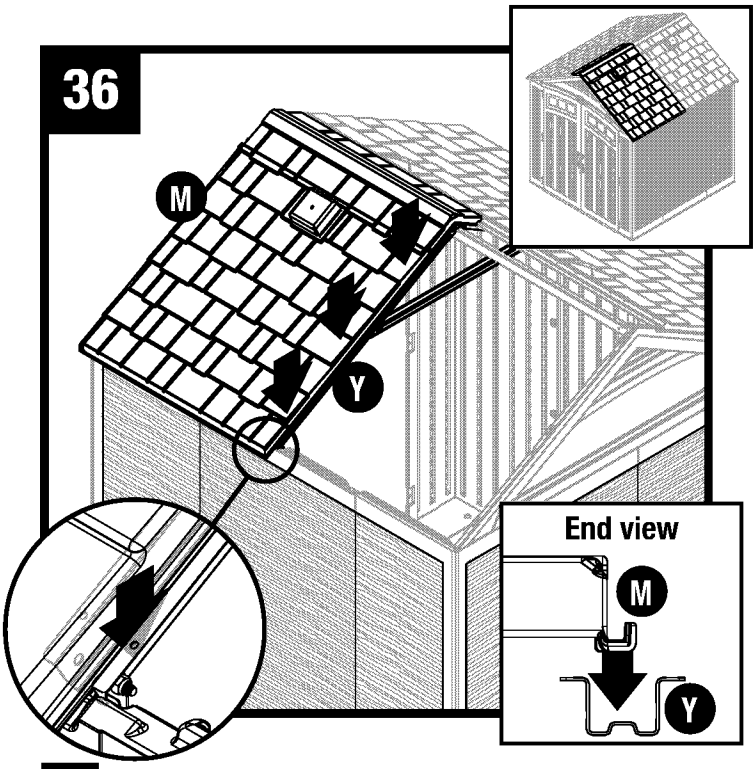

Press edge of right roof (M) into channel on truss leg (Y).

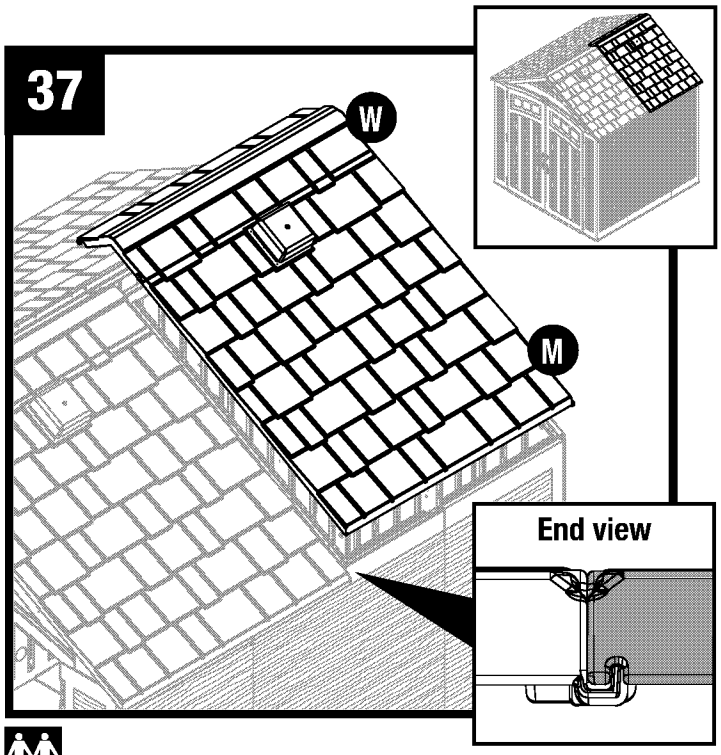

Repeat steps 34-36 for remaining right roof panel (M) and rear roof peak (W).

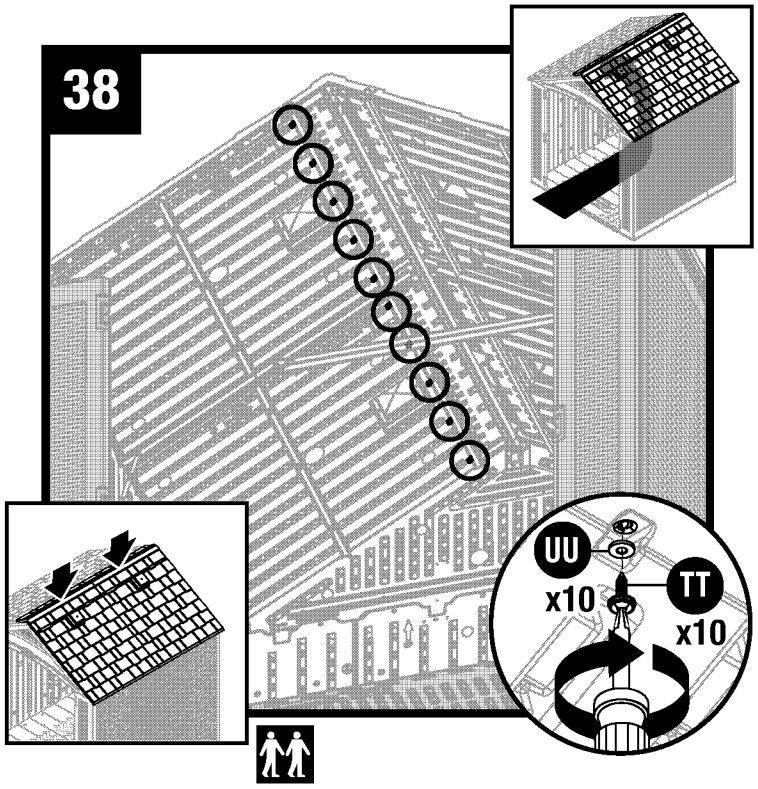

Push down the right roof panels with roof peaks from outside. From inside shed, secure roof peaks to left roof panels together using 10 rubber sealing washers (UU) and 10 sealing screws (TT).

Note: *For clarity, illustration is shown with front header removed.*

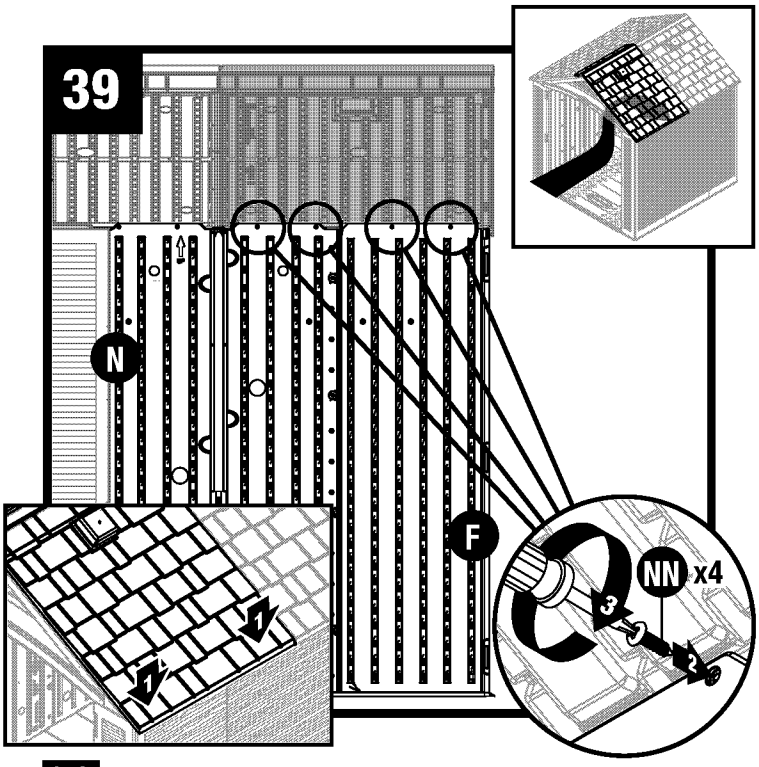

Pull down each lower corner of roof from outside. From inside shed, attach tabs on right front corner (F) and side panel (N) to roof panel with four screws (NN).

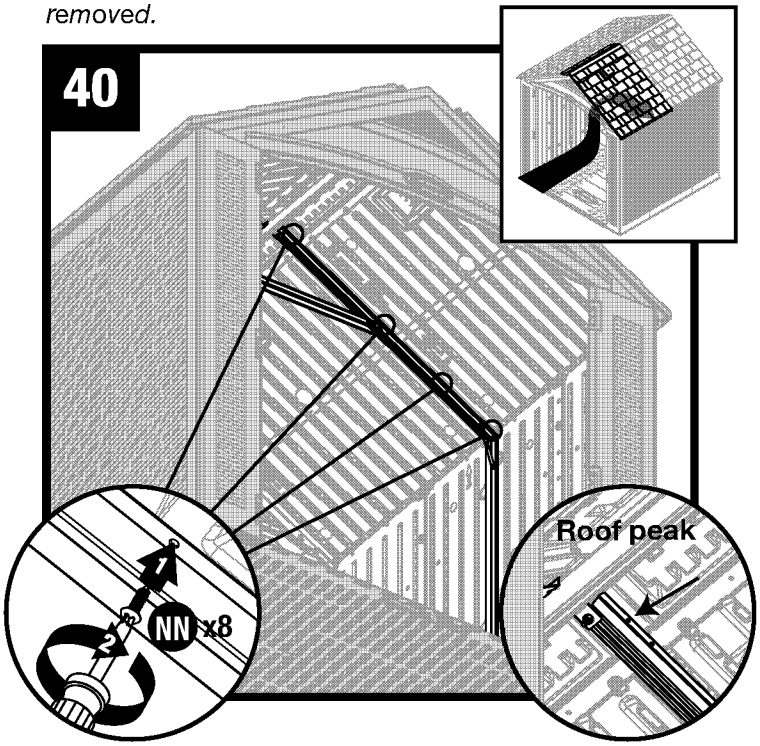

Secure roof to **both** sides of roof truss using eight screws (NN). Each screw will attach at a corresponding screw boss on the roof. Make sure roof peak is secured (highest screw holes on roof truss).

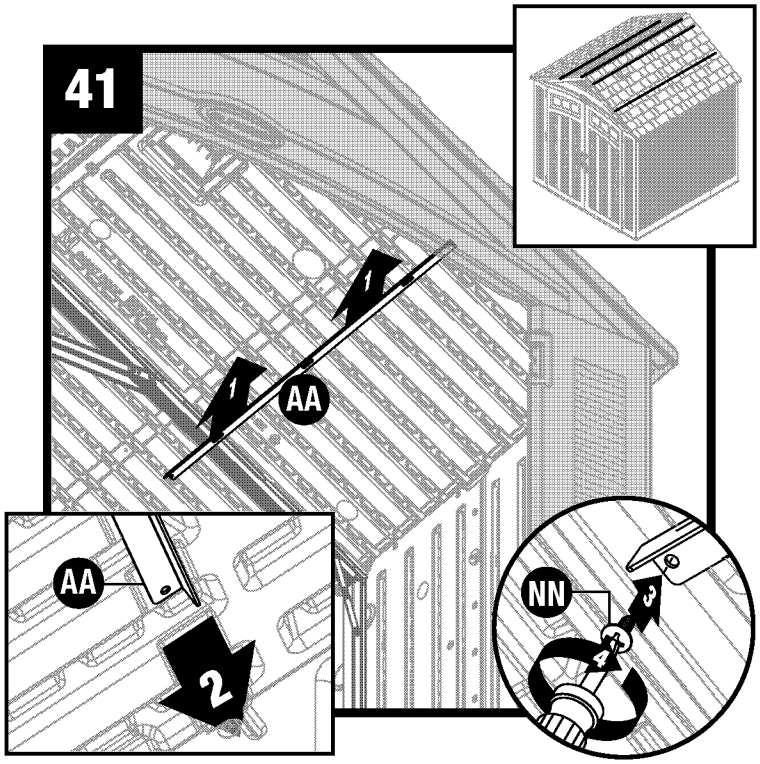

Raise roof support (AA) into position against roof. Slide roof support (AA) into front header. Secure roof support to underside of truss leg with one screw (NN).

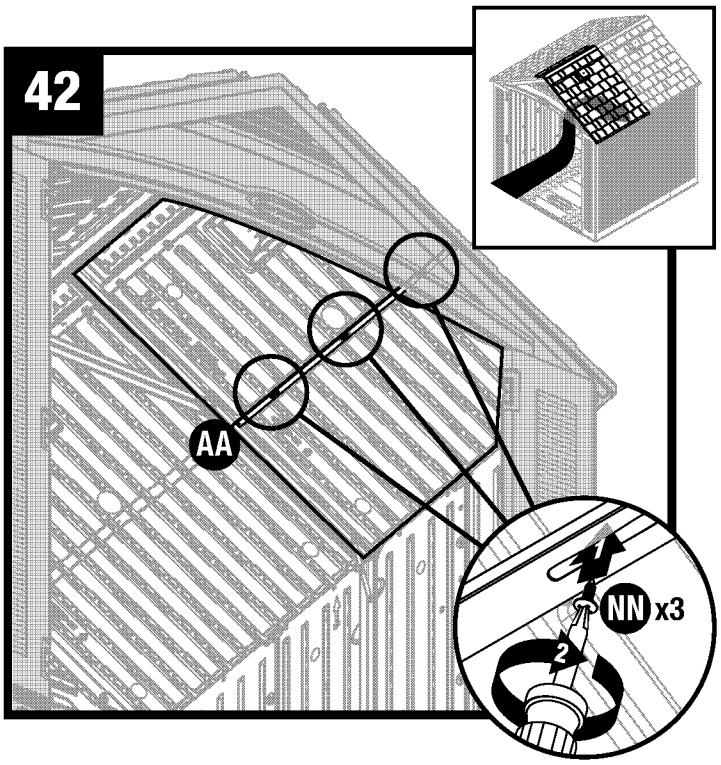

Secure roof support (AA) to roof using three screws (NN). Raise second roof support (AA) to top of roof panel. (Shown in next step)

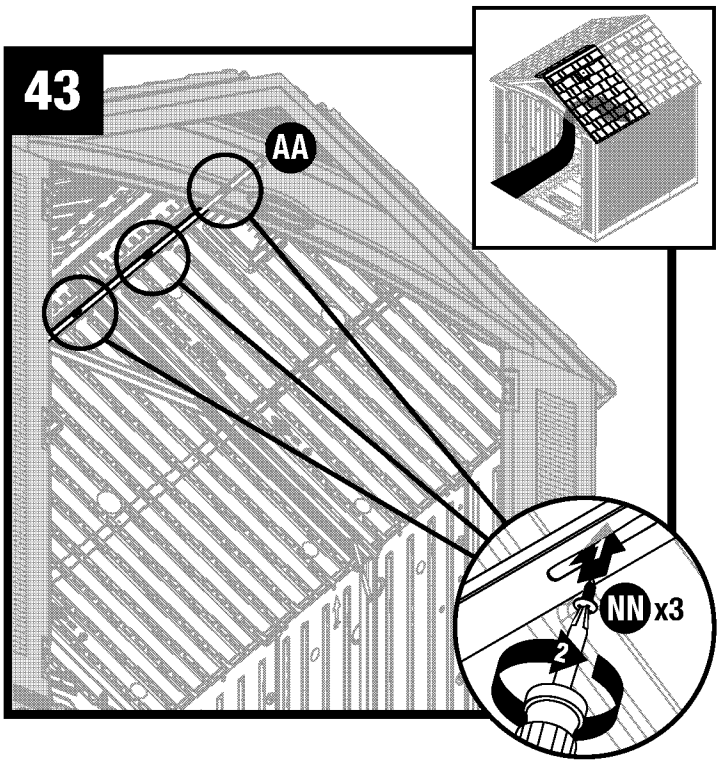

Repeat step 41 and 42 for top support bracket.

Repeat Steps 39 - 43 to secure remaining roof panels.

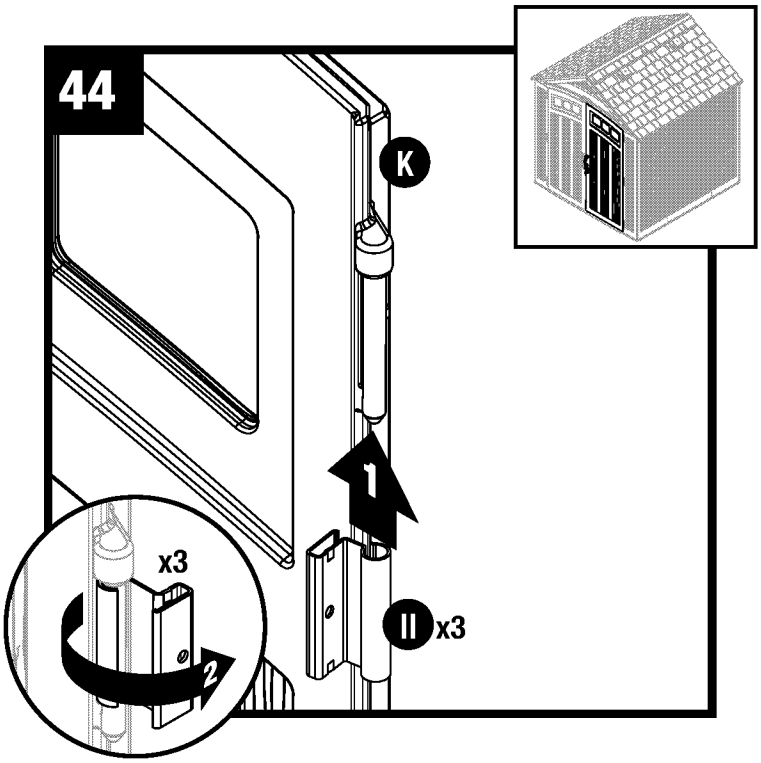

Stand right door (K) upright with three hinge mounts facing right. Slide one metal hinge plate (II) up onto each hinge mount. Rotate hinges to outside of door.

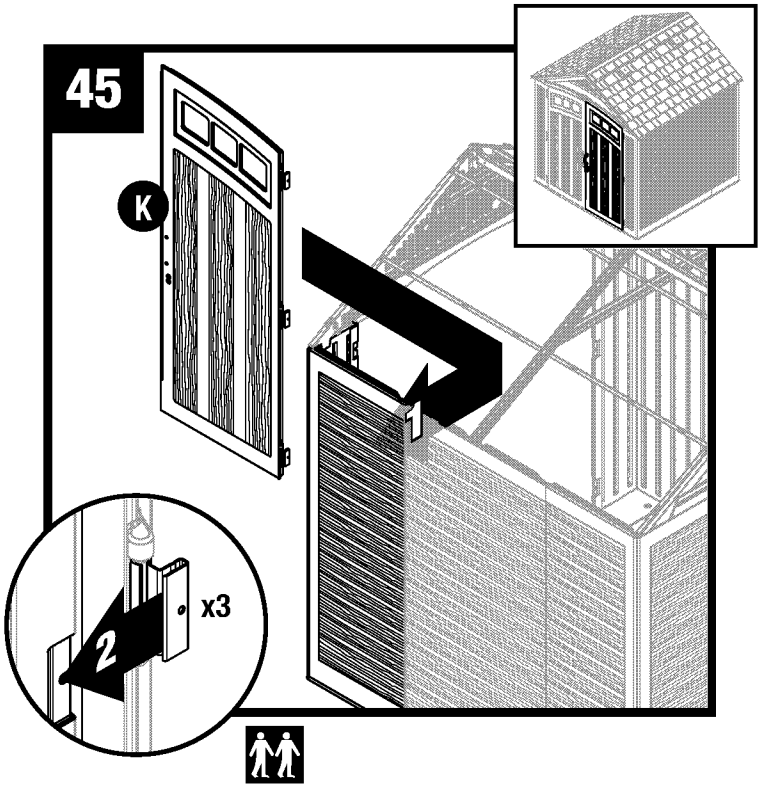

With metal hinge plates in open position, slide one hinge over each hinge receptacle on inside of right front panel.

Note: *For clarity, illustration is shown with roof removed.*

Note: *Use a rubber mallet if necessary.*

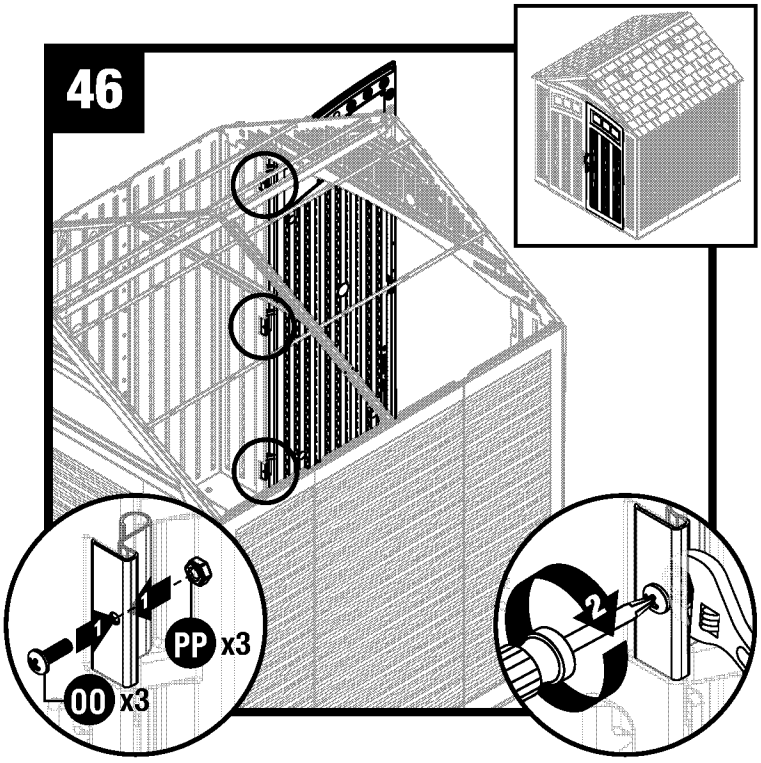

Secure each metal hinge plate with one screw (OO) and one locking nut (PP).

Repeat Steps 44-45 for left door (J).

Note: *For clarity, illustration is shown with roof removed.*

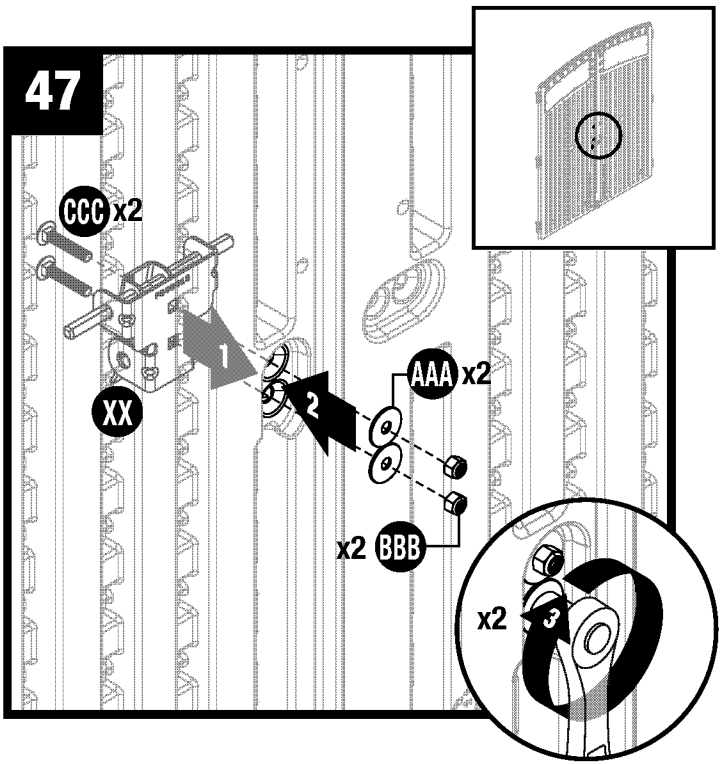

Insert two screws (CCC) into right latch plate (XX) and through right door. While holding plate in place on exterior of door, secure each screw with two washers (AAA) and two locking nuts (BBB).

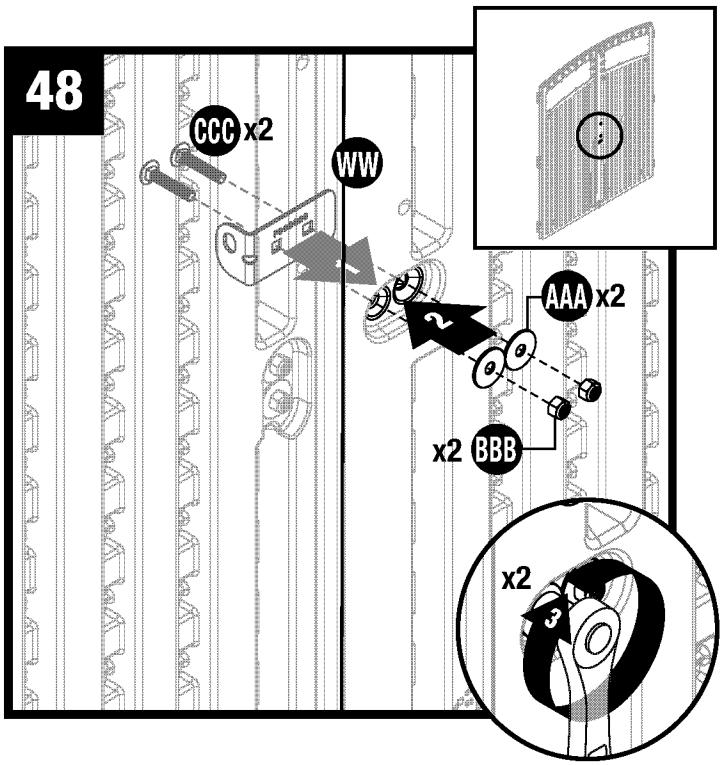

Insert screws (CCC) into left latch plate (WW) and through left door. While holding plate in place on exterior of door, secure each screw with two washers (AAA) and two locking nuts (BBB).

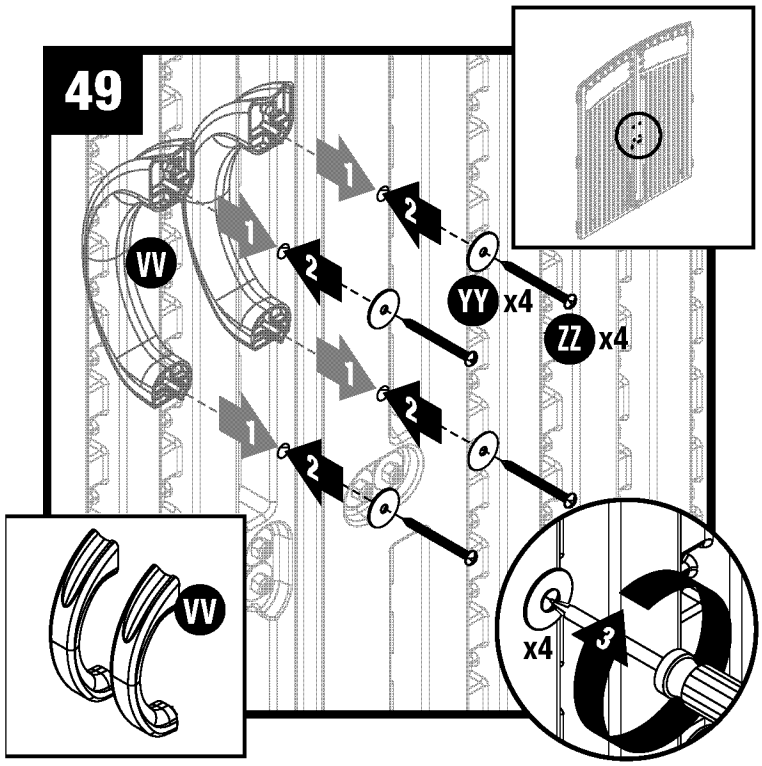

From the outside of doors, insert door handle (VV) stems into holes of left and right doors. On inside of doors, place washers (YY) on each door handle stem, and secure each with one screw (ZZ).

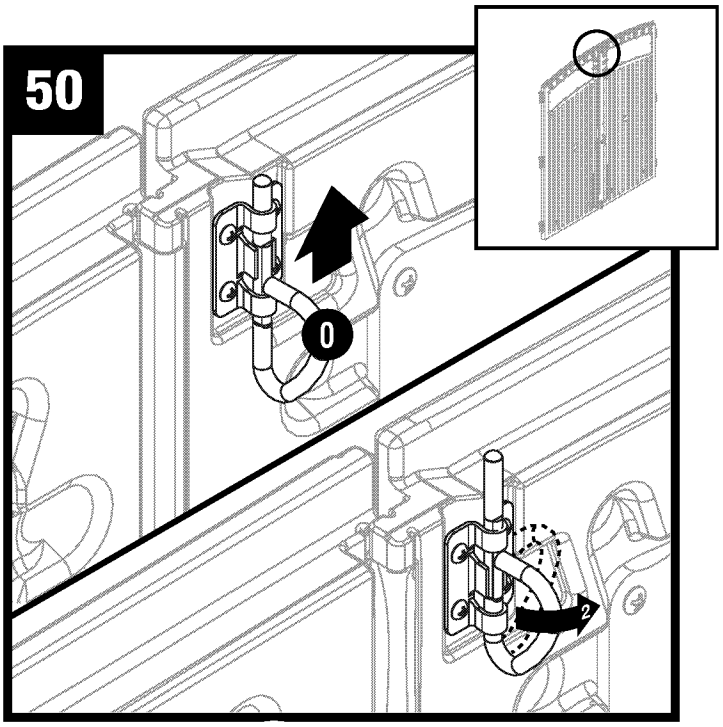

Lift upper D-ring (O) up to engage in front of header. Turn D-ring to right for locked position.

Shed Assembly/Doors (continued)

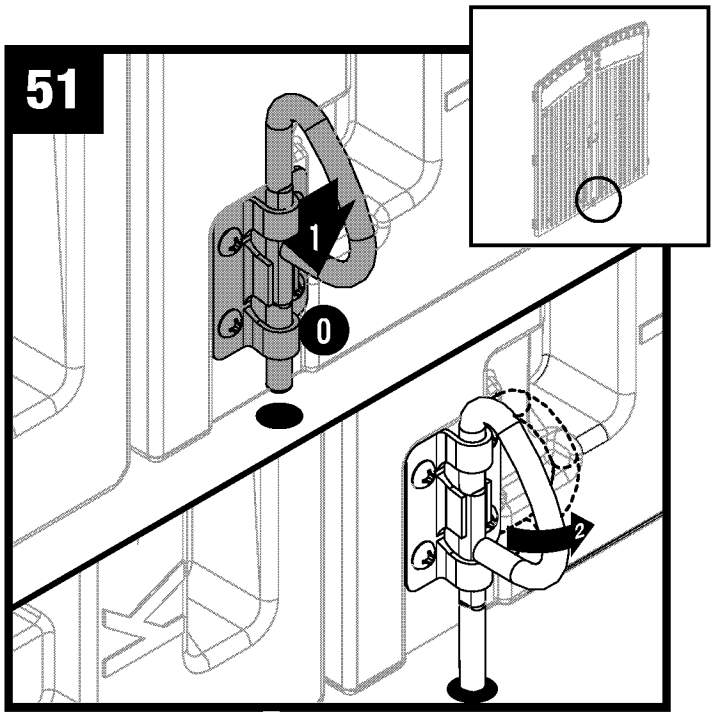

Push lower D-ring (O) down to engage with hole in floor. Turn D-ring to right for locked position.

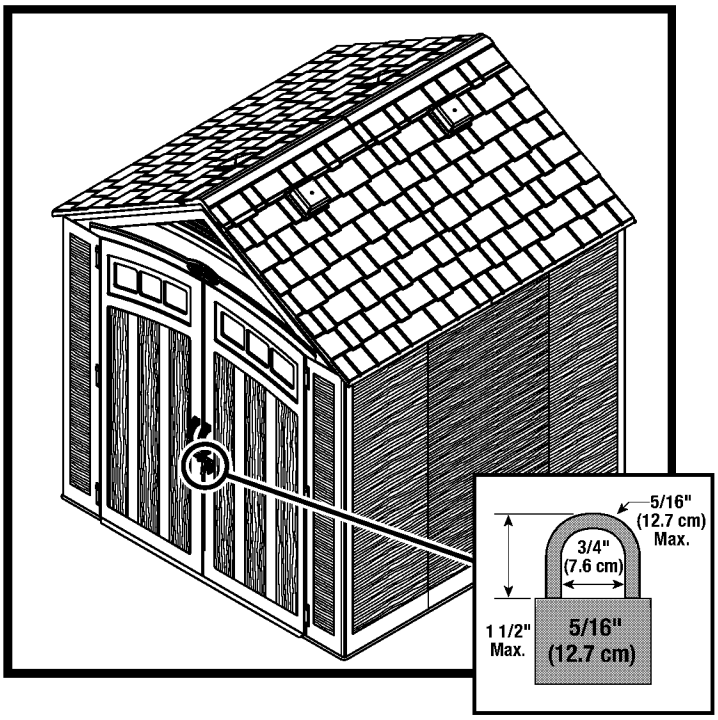

Attach a 5/16" lock (not provided) to door latch to properly secure shed.

Warranty

SUNCAST® Building, Shed and Gazebo Ten Year Limited Warranty

Your SUNCAST® Building, Shed or Gazebo has a TEN YEAR LIMITED WARRANTY against product failure resulting from defects in manufacturing or materials. The warranty period starts on the delivery date. Incidental and consequential damages are not covered.

Warranty Claims

To file a warranty claim contact the manufacturer, SUNCAST® CORPORATION, 701 North Kirk Road, Batavia, Illinois, 60510. Call toll free (800) 846-2345 or visit www.Suncast.com.

SUNCAST® will repair or replace only the parts that failed under the terms of the warranty. In some cases, the replacement parts may not be identical, but they shall be of equal or greater performance than the original part.

We may require proof of purchase. Proof of purchase may be the original dated store receipt. We may require evidence of the failure. Evidence of failure may include photographs or returning failed components to SUNCAST.

WARRANTY LIMITATIONS

THIS WARRANTY COVERS ONLY DEFECTS THAT AFFECT THE FORM, FIT OR FUNCTION OF THE UNIT. It excludes natural aging of the unit, discoloration, ordinary wear and tear, ordinary weathering, sunlight fading, or rust. It excludes staining caused by mold, mildew or tree sap and damage caused by animals including insects, vermin or household pets. The warranty does not cover damage caused by Acts of Nature including but not limited to: wind in excess of 65 mph; tornado; hurricane; microburst; hail; flood; blizzard; extreme heat; pollution or fire events. For all storm and windy conditions, the doors must be closed, latched, and a padlock used through the door handle padlock receptacles. Left and right doors may have different latches, and both must be engaged. Latching devices vary by model. The warranty does not cover damage caused by Sun energy reflected from "Low-E" windows or other reflective materials. The user is responsible for protecting the product from damage in this situation.

The following actions void the warranty: improper assembly; assembly on a foundation other than as described in the assembly instructions; use above intended and reasonable capacity; misuse; abuse; failure to perform ordinary maintenance; failure to remove snow over 8 inches deep; modification; cleaning with abrasive tools, exposing the unit to heat sources and vandalism. Painting, sandblasting, cleaning with harsh chemicals not recommended for plastics voids the warranty on resin components. Modification of the original product voids all warranties. Suncast assumes no liability for any modified product or consequences resulting from failure of a modified product. Damage due to moving,transporting, or relocating the product voids the warranty. Disassembly of this unit for reasons other than authorized repair voids the warranty.

Suncast is not responsible for: loss of use of the unit; labor for repair; inspection fees or disposal costs.

SUNCAST® reserves the right to reimburse the owner the purchase price of the unit on a STRAIGHT LINE DEPRECIATED BASIS FOR THE LENGTH OF THE WARRANTY IN LIEU OF REPAIR OR REPLACEMENT. The Purchase Price does not include taxes, delivery charges, site preparation costs, permits, fees, assembly costs, or disposal costs.

THIS WARRANTY IS NONTRANSFERABLE. IT IS VALID FOR NORMAL HOUSEHOLD USE ONLY. THE WARRANTY IS VOIDED BY COMMERCIAL OR INDUSTRIAL USE. IT EXCLUDES FLOOR MODELS, CLEARANCE AND OPEN BOX UNITS.

Notice

Suncast® does not represent that this unit will meet city, county, state, homeowner's association standards or zoning requirements. The owner is responsible for securing all permits and meeting other requirements needed for placement, construction and use.

THE MANUFACTURER'S LIABILITY HEREUNDER IS LIMITED SOLELY TO THE REPAIR OR REPLACEMENT OF THE DEFECTIVE PRODUCT OR PART AND THE MANUFACTURER SHALL IN NO EVENT BE LIABLE FOR ANY INCIDENTAL OR CONSEQUENTIAL DAMAGES WHICH MAY RESULT FROM ANY DEFECT IN MATERIAL OR WORKMANSHIP OR FROM THE BREACH OF ANY EXPRESS OR IMPLIED WARRANTY.

This warranty gives you specific legal rights, and you may also have other rights which vary from state to state. Some states do not allow the exclusion or limitation of incidental or consequential damages; the limitation or exclusion may not apply to you.

suncast®